COBRA

TT, TT/AWD

Spare parts list

Petrol breakers

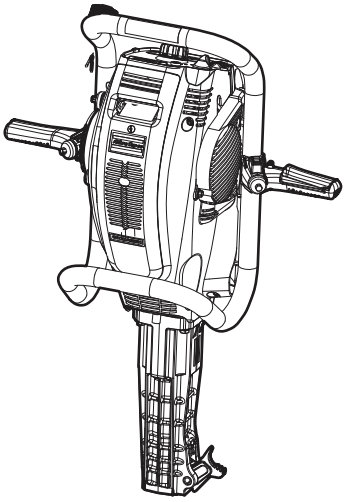

Atlas Copco

© 2010 Atlas Copco Construction Tools AB | No. 9800 0953 01c | 2010-11-12

Contents

General information 5

Spare parts list 6
- **Cobra TT and Cobra TT/AWD - Body** 6
- **Cobra TT - Motor** 10
- **Cobra TT/AWD - Motor** 14
- **Cobra TT and Cobra TT/AWD - Percussion unit** 18
- **Cobra TT and Cobra TT/AWD - Fuel tank** 22

Working tools 24
- **ISO standard hexagon 28 x 160 mm (1⅛ x 6¼ in.)** 24
- **ISO standard hexagon 32 x 160 mm (1¼ x 6¼ in.)** 25
- **US standard hexagon 1⅛ x 6 in. (28 x 152 mm)** 26
- **US standard hexagon 1¼ x 6 in. (32 x 152 mm)** 27

Accessories 28
- **Accessories** 28
- **Motor oil** 29

Kits 30
- **Service kit** 30
- **Seal kit** 31
- **Carburettor repair kit** 31

General information

This spare parts list applies to the following:

Part number	Description
8318 0700 43	Petrol breaker Cobra TT 32 x 160 mm (1¼ x 6¼ in.)
8318 0700 45	Petrol breaker Cobra TT 32 x 152 mm (1¼ x 6 in.)
8318 0700 47	Petrol breaker Cobra TT 28 x 160 mm (1⅛ x 6¼ in.)
8318 0700 49	Petrol breaker Cobra TT 28 x 152 mm (1⅛ x 6 in.)
8318 0700 51	Petrol breaker Cobra TT/AWD 32 x 160 mm (1¼ x 6¼ in.)
8318 0700 63	Petrol breaker Cobra TT/AWD NR 32 x 160 mm (1¼ x 6¼ in.)

Use only authorized parts. Any damage or malfunction caused by the use of unauthorized parts is not covered by Warranty or Product Liability.
Any unauthorized use or copying of the contents or any part thereof is prohibited. This applies in particular to trademarks, model denominations, part numbers, and drawings.

Instructions for use
This spare parts list contains no safety regulations and is merely intended to assist in the ordering of spare parts.
For information about operating, servicing, or repairing, the relevant Safety and operating instructions must be consulted at all costs.
Please observe the safety instructions listed in the relevant Safety and operating instructions!

Spare parts list

Cobra TT and Cobra TT/AWD - Body

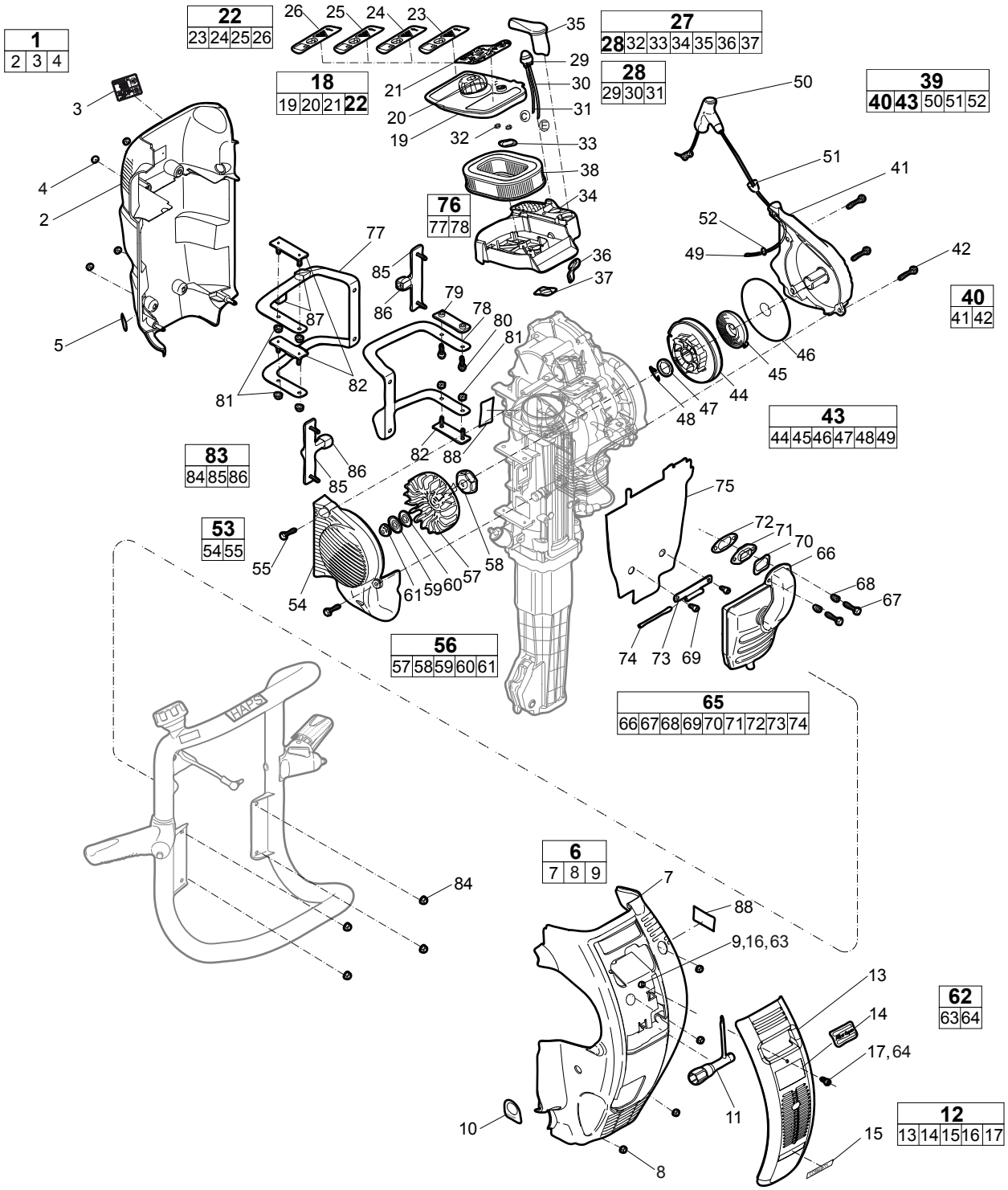

© 2010 Atlas Copco Construction Tools AB | No. 9800 0953 01c | 2010-11-12

No.	Description	Remark	Quantity	Part number
1(2-4)	**Back cover, complete**		1	9234 0000 20
2	Back cover		1	-
3	Warning label		1	9234 0009 23
4	Nut	M6	4	9232 0207 50
5	Oil level label		1	9234 0003 54
6(7-9)	**Front cover, complete**		1	9234 0000 19
7	Front cover		1	-
8	Nut	M6	4	9232 0207 50
9	Rubber insert		1	-
10	Label	"De-compression valve"	1	9234 0003 45
11	Spark plug key		1	9234 0000 56
12(13-17)	**Service cover, complete**		1	9234 0006 19
13	Service cover		1	-
14	Label	"Atlas Copco"	1	9234 0009 95
15	Label	"Cobra TT"	1	9234 0009 97
16	Rubber insert		1	-
17	Screw	M5 x 25 mm	1	9234 0005 33
18(19 -21 ,22)	**Filter cover, complete**		1	9234 0010 08
19	Filter cover		1	-
20	Filter cover knob		1	-
21	Label	"Start instruction"	1	9234 0003 43
22(23-26)	**Label, complete**		1	9234 0010 09
23	Label	"sound/shank/warnings triangle"	1	-
24	Label	"sound/shank/warnings triangle"	1	-
25	Label	"sound/shank/warnings triangle"	1	-
26	Label	"sound/shank/warnings triangle"	1	-
27(28,32-37)	**Filter housing, complete**		1	9234 0002 65
28(29-31)	**Prime pump, complete**		1	9234 0001 24
29	Prime pump		1	-
30	Pipe, tank connection (E)	L = 340 mm L = 13.39 in.	1	9234 0002 97
31	Pipe, carburettor connection (C)	L = 169 mm L = 6.65 in.	1	9234 0002 98
32	Nut	M5	2	9232 0208 80
33	Plate		1	9234 0000 63
34	Filter housing		1	-
35	Choke handle		1	9234 0000 26
36	Choke arm		1	9234 0010 30
37	Gasket		1	9234 0001 37
38	Air filter		1	9234 0001 36
39(40,43,50-52)	**Starter cover and pulley wheel, complete**		1	9234 0001 14
40(41-42)	**Starter cover, complete**		1	9234 0006 86
41	Starter cover		1	-
42	Screw	M6SF 6 x 20 mm	3	9232 0115 30
43(44-49)	**Pulley wheel, complete**		1	9234 0001 15
44	Pulley wheel		1	-
45	Starter spring		1	9234 0004 91
46	Fiber washer	Inner	1	9234 0000 40
47	Washer		1	9234 0000 41
48	Locking spring		1	9234 0000 54

No.	Description	Remark	Quantity	Part number
49	Robe		1	9234 0000 59
50	Handle		1	9234 0000 45
51	Robe guide		1	9232 0905 30
52	Lock ring		1	9232 0503 50
53(54-55)	**Fan cover, complete**		1	9234 0002 01
54	Fan cover		1	-
55	Screw	M6SF 6 x 20 mm	2	9232 0115 30
56(57-61)	**Fan, complete**		1	9234 0000 81
57	Fan		1	-
58	Hub		1	9234 0000 84
59	Cup spring		1	0384 3310 00
60	Washer		1	9234 0000 85
61	Nut		1	9232 0209 00
62(63-64)	**Rubber insert, complete**		1	9234 0010 29
63	Rubber insert		1	-
64	Screw	M5 x 25 mm	1	9234 0005 33
65(66-74)	**Silencer, complete**	From Ser. No. KAL 15000	1	9234 0015 45
66	Silencer		1	-
67	Screw	M6SF 6 x 45 mm	2	9232 0122 00
68	Spring		2	9234 0004 86
69	Screw	M6S 6 x 128.8 mm	2	9232 0124 00
70	Gasket		1	9234 0004 13
71	Silencer insert		1	9234 0004 02
72	Gasket		1	9234 0002 67
73	Hinge		1	9234 0006 74
74	Hinge pin	FRP ø5 x 80 mm	1	9234 0004 10
75	Heat shield		1	9234 0015 11
76(77-78)	**Leaf spring, complete**		1	9234 0005 81
77	Leaf spring	Right	1	9234 0001 45
78	Leaf spring	Left	1	9234 0001 44
79	Pressure plate	Top left	1	9234 0003 32
80	Screw	M6SF 6 x 16 mm 8.8 FZB	2	9234 0002 99
81	Nut	M6	6	9232 0207 50
82	Pressure plate		3	9234 0003 36
83(84-86)	**End stop bracket, complete**		1	9234 0001 43
84	Nut	M6	4	9232 0207 50
85	End stop bracket		2	-
86	Plastic bush		2	9234 0003 35
87	Dampening cushion		2	-
88	Label	"EPA"	2	-

© 2010 Atlas Copco Construction Tools AB | No. 9800 0953 01c | 2010-11-12

Cobra TT - Motor

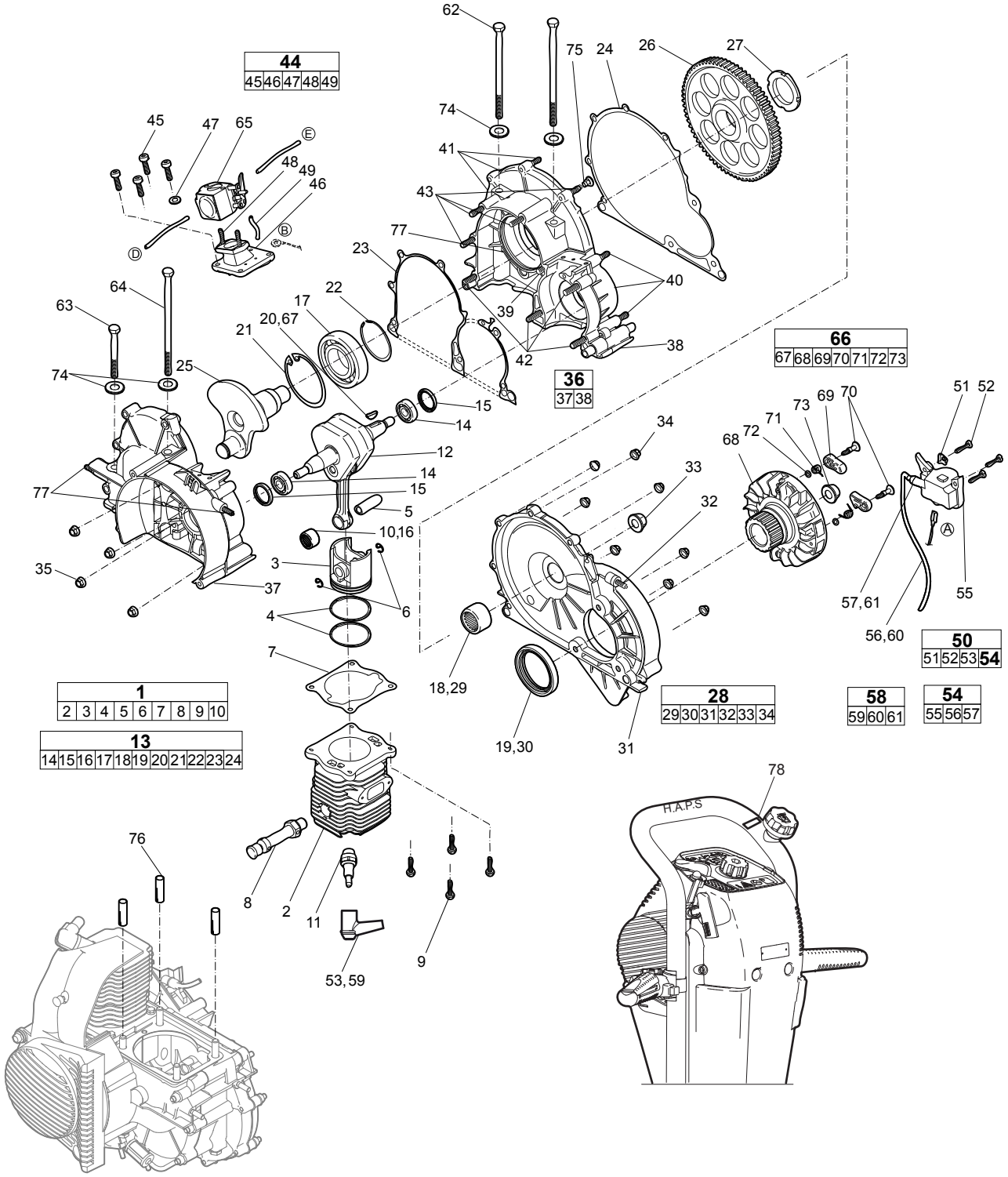

© 2010 Atlas Copco Construction Tools AB | No. 9800 0953 01c | 2010-11-12

No.	Description	Remark	Quantity	Part number
1(2-10)	**Motor cylinder, complete**		1	9234 0001 06
2	Cylinder		1	9234 0014 19
3	Piston		1	9234 0014 20
4	Piston ring		2	9234 0000 07
5	Gudgeon pin		1	9234 0000 08
6	Lock ring		2	9234 0000 09
7	Gasket		1	9234 0001 26
8	De-compression valve		1	9234 0003 40
9	Screw		4	9232 0118 80
10	Needle bearing		1	-
11	Spark plug, complete	Champion RCJ8	1	9234 0004 48
12	Motor crankshaft		1	9234 0000 38
13(14-24)	**Bearing and seal, complete**		1	9234 0003 18
14	Ball bearing		2	-
15	Seal		2	9234 0006 06
16	Needle bearing		1	-
17	Ball bearing		1	-
18	Needle bearing		1	9234 0003 96
19	Seal		1	9234 0000 74
20	Woodruff key		1	9232 2228 40
21	Lock ring		1	9234 0000 72
22	Lock ring		1	9234 0000 75
23	Gasket	Crankcase	1	9234 0004 14
24	Gasket	Transmission cover	1	9234 0004 15
25	Transmission axle		1	9234 0005 37
26	Transmission cog wheel		1	9234 0002 79
27	Nut	KML-6 left	1	9234 0000 76
28(29-34)	**Transmission cover, complete**		1	9234 0003 20
29	Needle bearing		1	9234 0003 96
30	Seal		1	9234 0000 74
31	Transmission cover		1	-
32	Stud	M6 x 18 mm, L=28 mm	1	9234 0004 23
33	Oil level plug	R¼ in.	1	9234 0005 27
34	Nut	M6	8	9232 0207 50
35	Nut	M6	4	9232 0207 50
36(37-38)	**Crankcase, complete**		1	9234 0002 82
37	Crankcase	Fan side	1	-
38	Crankcase	Transmission side	1	-
39	Stud	M6 x 70 mm, L = 85 mm	1	9234 0001 58
40	Stud	M6 x 20 mm, L = 32 mm	3	9234 0000 71
41	Stud	M6 x 25 mm, L = 40 mm	3	9234 0001 57
42	Stud	M6 x 50 mm, L = 65 mm	4	9234 0000 69
43	Stud	M6 x 30 mm, L = 45 mm	5	9234 0000 67
44(45-49)	**Crankcase valve, complete**		1	9234 0015 49
45	Screw		4	9232 0118 80
46	Crankcase valve		1	-
47	Washer	BRB 5.3 x 10 x 1 mm BRB 0.09 x 0.17 x 0.017 in.	1	0301 2318 00
48	Stud		2	9234 0001 80
49	Pipe	L = 36 mm L = 1.42 in.	1	9234 0003 24

No.	Description	Remark	Quantity	Part number
50(51-53,54)	**Electronic unit, complete**		1	9234 0002 81
51	Protective washer		1	9234 0002 05
52	Screw		3	9232 0120 00
53	Spark plug cap		1	-
54(55-57)	**Electronic unit, complete**		1	-
55	Electronic unit		1	-
56	Ignition cable		1	-
57	Grommet		1	-
58(59-61)	**Spark plug cable, complete**		1	9234 0006 01
59	Spark plug cap		1	-
60	Ignition cable		1	-
61	Grommet		1	-
62	Screw	M6S 8 x 160 mm 8.8 FZB	2	0147 1347 03
63	Screw	M6S 8 x 75 mm 8.8 FZB	1	0147 1335 03
64	Screw	M6S 8 x 140 mm 8.8 FZB	1	0147 1345 03
65	Carburettor		1	-
66(67-73)	**Flywheel, complete**		1	9234 0003 04
67	Woodruff key		1	9232 2228 40
68	Flywheel		1	-
69	Carrier		2	9234 0000 32
70	Screw		2	9234 0001 54
71	Carrier spring		2	9234 0001 55
72	Support washer		2	9234 0002 00
73	Locking nut	M6MF M10 8.8	1	9232 0209 00
74	Washer	BRB 8.4 x 16 x 1.5 mm BRB 0.15 x 0.28 x 0.03 in.	4	0300 0274 74
75	Bushing		1	9232 0905 20
76	Plastic bushing		3	9234 0005 75
77	Stud	M6 x 18 mm, L=28 mm	3	9234 0004 23
78	Label		1	9234 0009 09

© 2010 Atlas Copco Construction Tools AB | No. 9800 0953 01c | 2010-11-12

Cobra TT/AWD - Motor

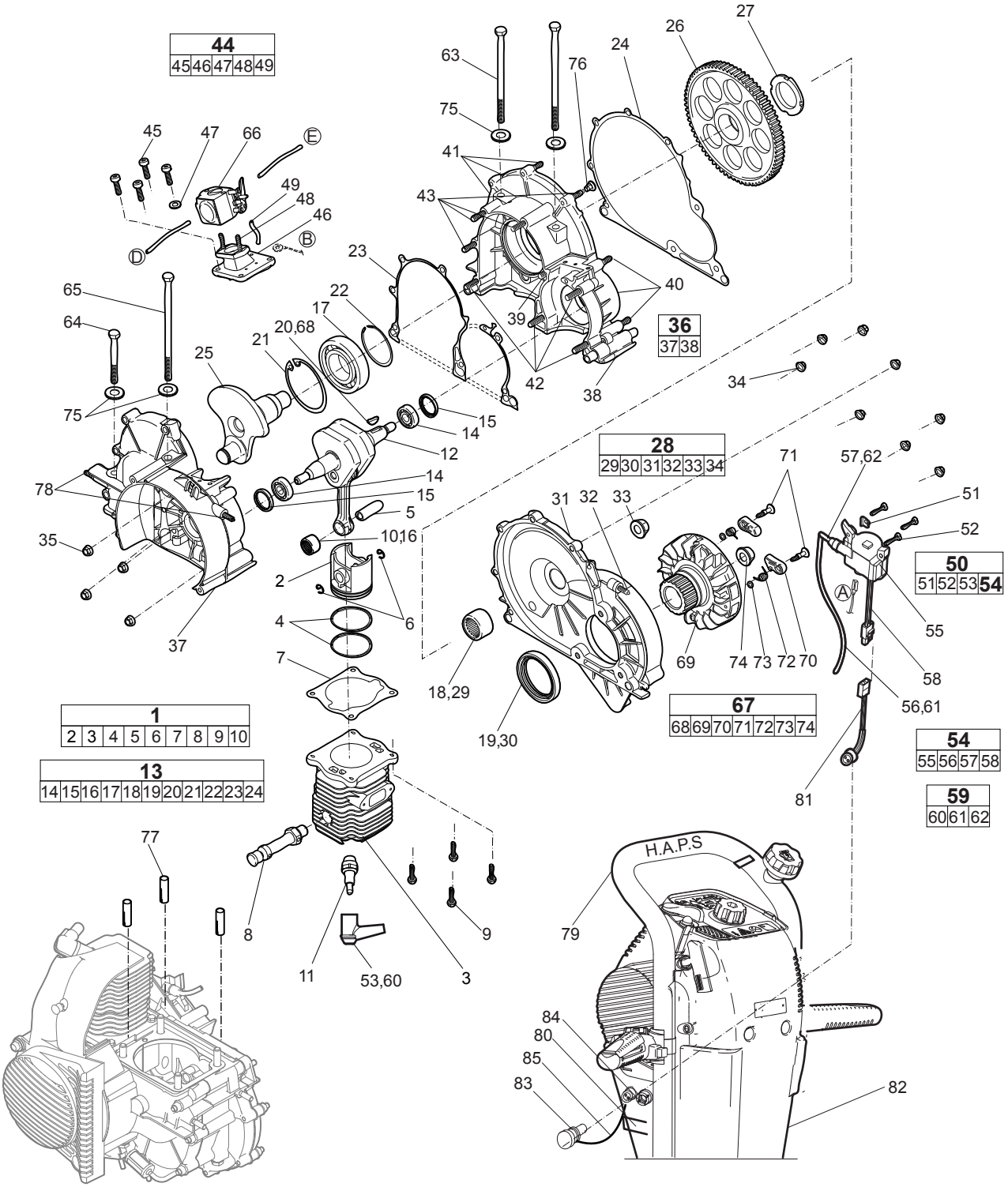

© 2010 Atlas Copco Construction Tools AB | No. 9800 0953 01c | 2010-11-12

No.	Description	Remark	Quantity	Part number
1(2-10)	**Motor cylinder, complete**		1	9234 0001 06
2	Piston		1	9234 0014 20
3	Cylinder		1	9234 0014 19
4	Piston ring		2	9234 0000 07
5	Gudgeon pin		1	9234 0000 08
6	Lock ring		2	9234 0000 09
7	Gasket		1	9234 0001 26
8	De-compression valve		1	9234 0003 40
9	Screw		4	9232 0118 80
10	Needle bearing		1	-
11	Spark plug, complete	Champion RCJ8	1	9234 0004 48
12	Motor crankshaft		1	9234 0000 38
13(14-24)	**Bearing and seal, complete**		1	9234 0003 18
14	Ball bearing		2	-
15	Seal		2	9234 0006 06
16	Needle bearing		1	-
17	Ball bearing		1	-
18	Needle bearing		1	9234 0003 96
19	Seal		1	9234 0000 74
20	Woodruff key		1	9232 2228 40
21	Lock ring		1	9234 0000 72
22	Lock ring		1	9234 0000 75
23	Gasket	Crankcase	1	9234 0004 14
24	Gasket	Transmission cover	1	9234 0004 15
25	Transmission axle		1	9234 0005 37
26	Transmission cog wheel		1	9234 0002 79
27	Nut	KML - 6 left	1	9234 0000 76
28(29-34)	**Transmission cover, complete**		1	9234 0003 20
29	Needle bearing		1	9234 0003 96
30	Seal		1	9234 0000 74
31	Transmission cover		1	-
32	Stud	M6 x 18 mm, L = 28 mm	1	9234 0004 23
33	Oil level plug	R¼ in.	1	9234 0005 27
34	Nut	M6	8	9232 0207 50
35	Nut	M6	4	9232 0207 50
36(37-38)	**Crankcase, complete**		1	9234 0002 82
37	Crankcase	Fan side	1	-
38	Crankcase	Transmission side	1	-
39	Stud	M6 x 70 mm, L = 85 mm	1	9234 0001 58
40	Stud	M6 x 20 mm, L = 32 mm	3	9234 0000 71
41	Stud	M6 x 25 mm, L = 40 mm	3	9234 0001 57
42	Stud	M6 x 50 mm, L = 65 mm	4	9234 0000 69
43	Stud	M6 x 30 mm, L = 45 mm	5	9234 0000 67
44(45-49)	**Crankcase valve, complete**		1	9234 0015 49
45	Screw		4	9232 0118 80
46	Crankcase valve		1	-
47	Washer	BRB 5.3 x 10 x 1 mm BRB 0.09 x 0.17 x 0.017 in.	1	0301 2318 00
48	Stud		2	9234 0001 80
49	Pipe	L = 36 mm L = 1.42 in.	1	9234 0003 24

No.	Description	Remark	Quantity	Part number
50(51-53,54)	**Electronic unit, complete**		1	9234 0006 60
51	Protective washer		1	9234 0002 05
52	Screw		3	9232 0120 00
53	Spark plug cap		1	-
54(55-58)	**Electronic unit, complete**		1	-
55	Electronic unit		1	-
56	Ignition cable		1	-
57	GrommetCon		1	-
58	GrommetCon		1	-
59(60-62)	**Spark plug cable, complete**		1	9234 0006 01
60	Spark plug cap		1	-
61	Ignition cable		1	-
62	GrommetCon		1	-
63	Screw	M6S 8 x 160 mm 8.8 FZB	2	0147 1347 03
64	Screw	M6S 8 x 75 mm 8.8 FZB	1	0147 1335 03
65	Screw	M6S 8 x 140 mm 8.8 FZB	1	0147 1345 03
66	Carburettor		1	-
67(68-74)	**Flywheel, complete**		1	9234 0003 04
68	Woodruff key		1	9232 2228 40
69	Flywheel		1	-
70	Carrier		2	9234 0000 32
71	Screw		2	9234 0001 54
72	Carrier spring		2	9234 0001 55
73	Support washer		2	9234 0002 00
74	Locking nut	M6MF M10 8.8	1	9232 0209 00
75	Washer	BRB 8.4 x 16 x 1.5 mm BRB 0.15 x 0.3 x 0.03 in.	4	0300 0274 74
76	Bushing		1	9232 0905 20
77	Support washer		3	9234 0005 75
78	Stud	M6 x 18 mm, L = 28 mm	3	9234 0004 23
79	Label		1	9234 0009 09
80	Label	"EPA"	1	-
81	Contact housing		1	9234 0006 68
82	Front cover		1	9234 0006 52
83	Adapter		1	9234 0006 65
84	Holder		1	9234 0012 04
85	String		1	9234 0014 01

© 2010 Atlas Copco Construction Tools AB | No. 9800 0953 01c | 2010-11-12

Cobra TT and Cobra TT/AWD - Percussion unit

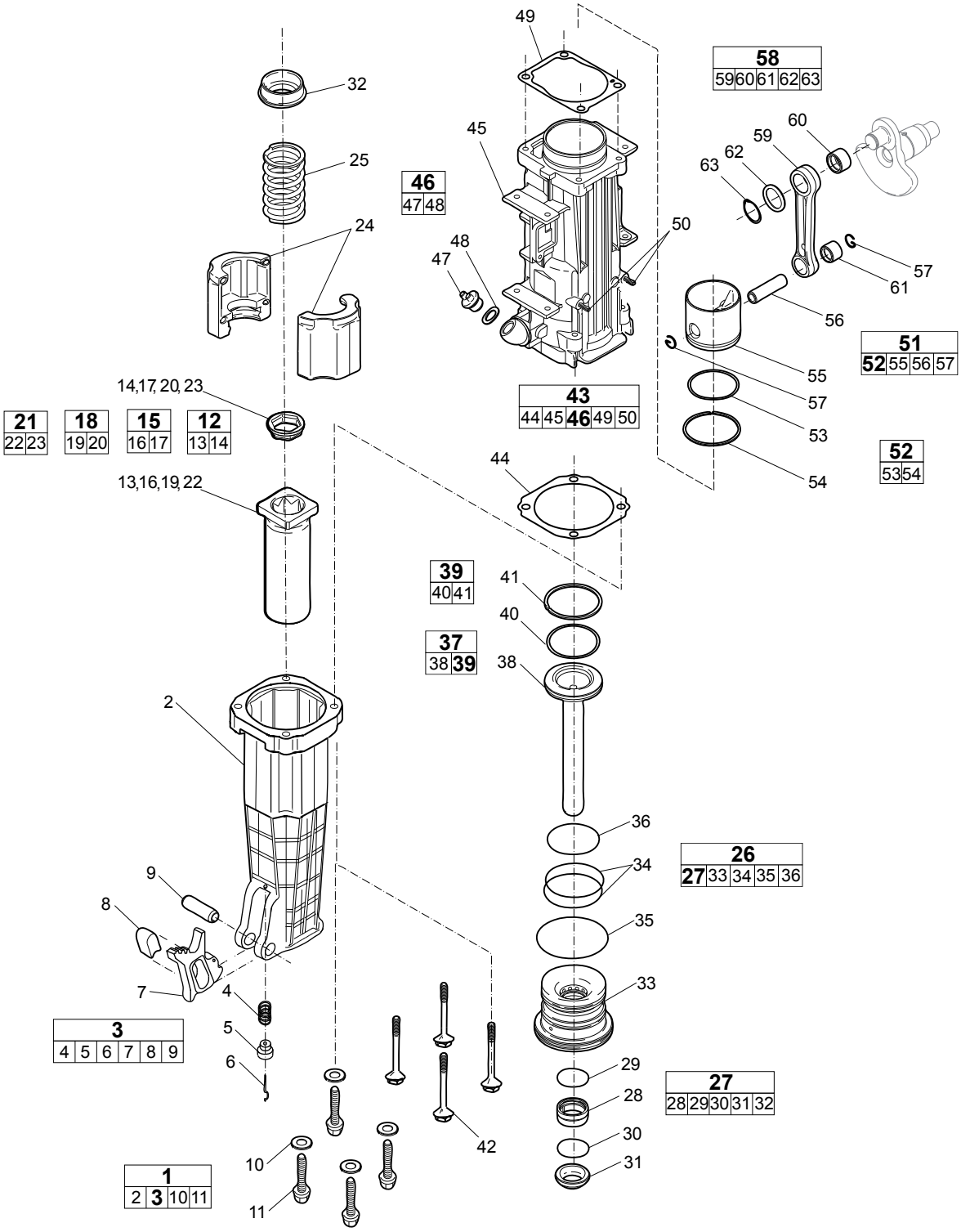

© 2010 Atlas Copco Construction Tools AB | No. 9800 0953 01c | 2010-11-12

No.	Description	Remark	Quantity	Part number
1(2,3,10-11)	**Breaker housing, complete**		1	9234 0005 55
2	Breaker housing		1	-
3(4-9)	**Tool latch, complete**		1	9234 0006 37
4	Spring		1	-
5	Guide		1	-
6	Guide pin		1	-
7	Tool latch		1	-
8	Tool latch insert		1	-
9	Spring pin		1	-
10	Washer	From year 2007	4	0300 0274 74
11	Screw	From year 2007, 25 Nm	4	9234 0010 04
12(13-14)	**Chuck, complete**		1	9234 0005 50
13	Chuck	28 x 152 mm 1⅛ x 6 in.	1	-
14	Seal	28 mm 1⅛ in.	1	9234 0005 24
15(16-17)	**Chuck, complete**		1	9234 0005 49
16	Chuck	28 x 160 mm 1⅛ x 6¼ in.	1	-
17	Seal	28 mm 1⅛ in.	1	9234 0005 24
18(19-20)	**Chuck, complete**		1	9234 0005 48
19	Chuck	32 x 152 mm 1¼ x 6 in.	1	-
20	Seal	32 mm 1¼ in.	1	9234 0005 17
21(22-23)	**Chuck, complete**		1	9234 0005 44
22	Chuck	32 x 160 mm 1¼ x 6¼ in.	1	-
23	Seal	32 mm 1¼ in.	1	9234 0005 17
24	Feed stop		2	9234 0005 35
25	Recoil spring		1	9234 0001 79
26(27,33-36)	**Piston guide, complete**		1	9234 0005 47
27(28-32)	**Scraper ring, complete**		1	9234 0005 54
28	Speed seal		1	-
29	O-ring		1	-
30	Lock ring		1	-
31	Scraper ring		1	-
32	Support ring		1	9234 0005 36
33	Piston guide		1	-
34	O-ring		2	9234 0002 28
35	O-ring		1	9234 0002 29
36	O-ring		1	9234 0002 30
37(38,39)	**Hammer piston, complete**		1	9234 0003 00
38	Hammer piston		1	-
39(40-41)	**Piston ring, complete**		1	9234 0002 71
40	Piston ring		1	-
41	O-ring		1	-
42	Screw	Until year 2007	4	9234 0005 80

No.	Description	Remark	Quantity	Part number
43(44-45,46,49-50)	**Hammer cylinder, complete**		1	9234 0004 08
44	Gasket		1	9234 0001 28
45	Hammer cylinder		1	-
46(47-48)	**Oil plug, complete**		1	9232 0123 51
47	Oil plug		1	-
48	O-ring		1	9232 0310 90
49	Gasket		1	9234 0001 27
50	Stud	M6 x 18 mm, L = 28 mm	2	9234 0004 23
51(52,55-57)	**Drive piston, complete**		1	9234 0003 01
52(53-54)	**Piston ring, complete**		1	9234 0002 71
53	Piston ring		1	-
54	O-ring		1	-
55	Drive piston		1	-
56	Gudgeon pin		1	9234 0002 45
57	Circlip		2	9232 0505 60
58(59-63)	**Connection rod, complete**		1	9234 0006 18
59	Connection rod		1	-
60	Needle bearing		1	9234 0003 96
61	Needle bearing		1	4090 0369 00
62	Shim		1	9234 0004 12
63	Lock ring		1	9234 0002 84

© 2010 Atlas Copco Construction Tools AB | No. 9800 0953 01c | 2010-11-12

Cobra TT and Cobra TT/AWD - Fuel tank

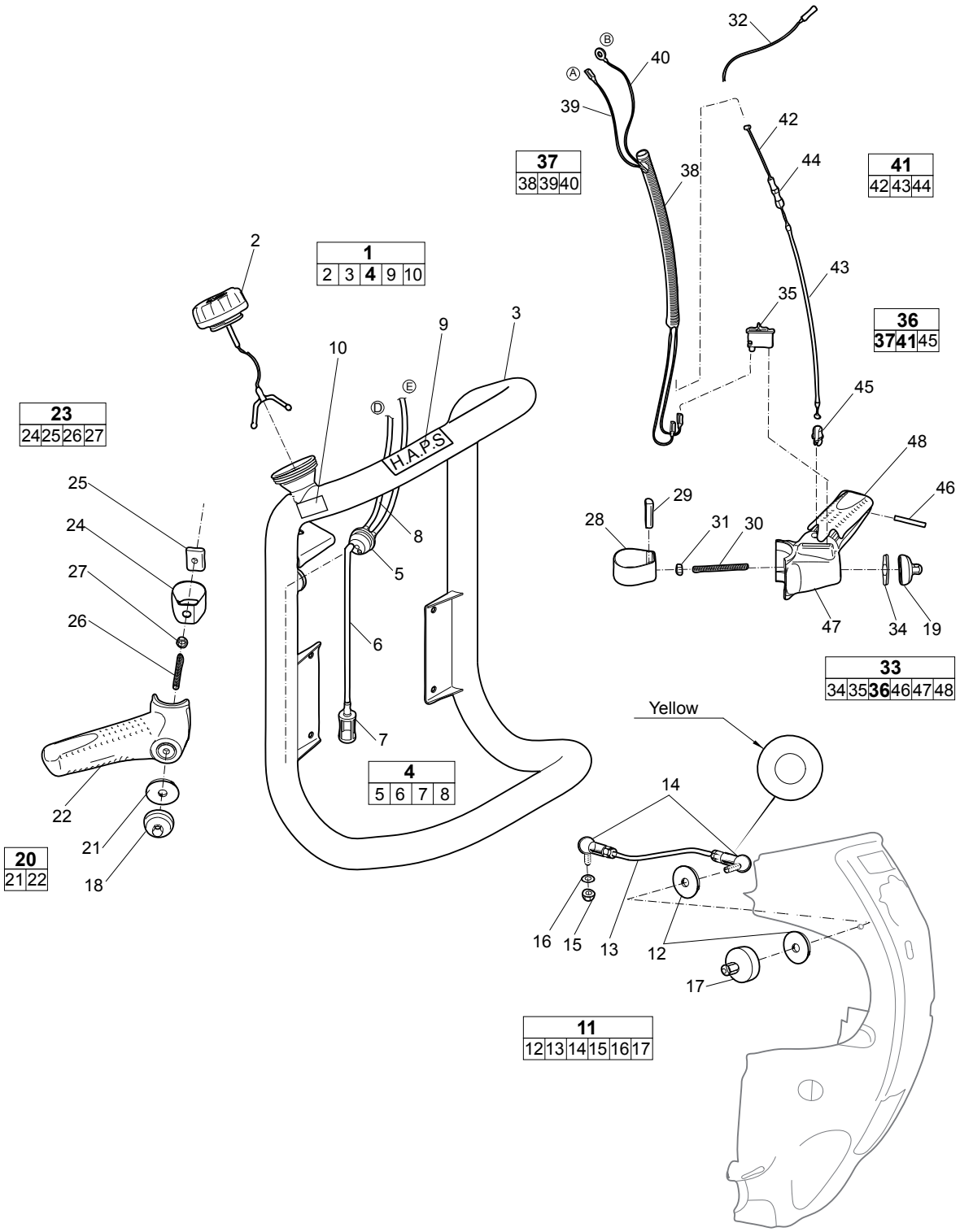

© 2010 Atlas Copco Construction Tools AB | No. 9800 0953 01c | 2010-11-12

No.	Description	Remark	Quantity	Part number
1(2-3,4,9-10)	**Handle frame, Fuel tank, complete**		1	9234 0006 47
2	Tank cap		1	9234 0015 19
3	Handle frame		1	-
4(5-8)	**Tank grommet, complete**		1	9234 0004 84
5	Tank grommet		1	-
6	Pipe, fuel filter	L = 625 mm L = 24.61 in.	1	9234 0004 85
7	Filter		1	9232 2306 00
8	Pipe, tank connection	L = 340 mm L = 13.39 in.	1	9234 0002 97
9	Label	"H.A.P.S"	1	9234 0006 05
10	Label	"Oil mix 2%"	1	9234 0009 09
11(12-17)	**Stabilization arm, complete**		1	9234 0007 50
12	Washer		2	9234 0005 84
13	Stabilization arm		1	-
14	Toogle joint		2	-
15	Nut	M6, DIN 6927	1	9232 0207 50
16	Washer	6.4 x 12 mm, T = 1.5 mm	1	0301 2321 00
17	Handle locking nut		1	9234 0002 18
18	Handle locking nut		1	9234 0002 18
19	Handle locking nut		1	9234 0002 18
20(21-22)	**Handle, complete**	Right	1	9234 0005 68
21	Washer		1	9234 0005 84
22	Handle	Right	1	-
23(24-27)	**Handle strap, complete**		1	9234 0002 78
24	Strap		1	-
25	Nut		1	-
26	Stud		1	-
27	Nut	M6MF M6	1	9234 0005 10
28	Strap		1	-
29	Nut		1	-
30	Stud		1	-
31	Nut	M6MF M6	1	9234 0005 10
32	Plastic tie band		1	9234 0004 69
33(34-35,36,46-48)	**Handle, complete**	Left	1	9234 0005 69
34	Washer		1	9234 0005 84
35	Stop switch		1	9234 0001 11
36(37,41,45)	**Protection pipe and throttle cable, complete**		1	9234 0005 32
37(38-40)	**Protection pipe, complete**		1	9234 0002 55
38	Protection pipe		1	-
39	Cable, induction coil	L = 690 mm L = 27.17 in.	1	-
40	Cable, earth connection	L = 395 mm L = 15.55 in.	1	-
41(42-44)	**Throttle cable, complete**		1	9234 0002 12
42	Wire		1	-
43	Outer cable		1	-
44	Adjustment screw with nut		1	-
45	Nipple		1	9234 0004 90
46	Cylindrical pin	CP 5 x 32 mm	1	9234 0005 65
47	Handle	Left	1	9234 0004 87
48	Throttle control		1	9234 0005 25

Working tools

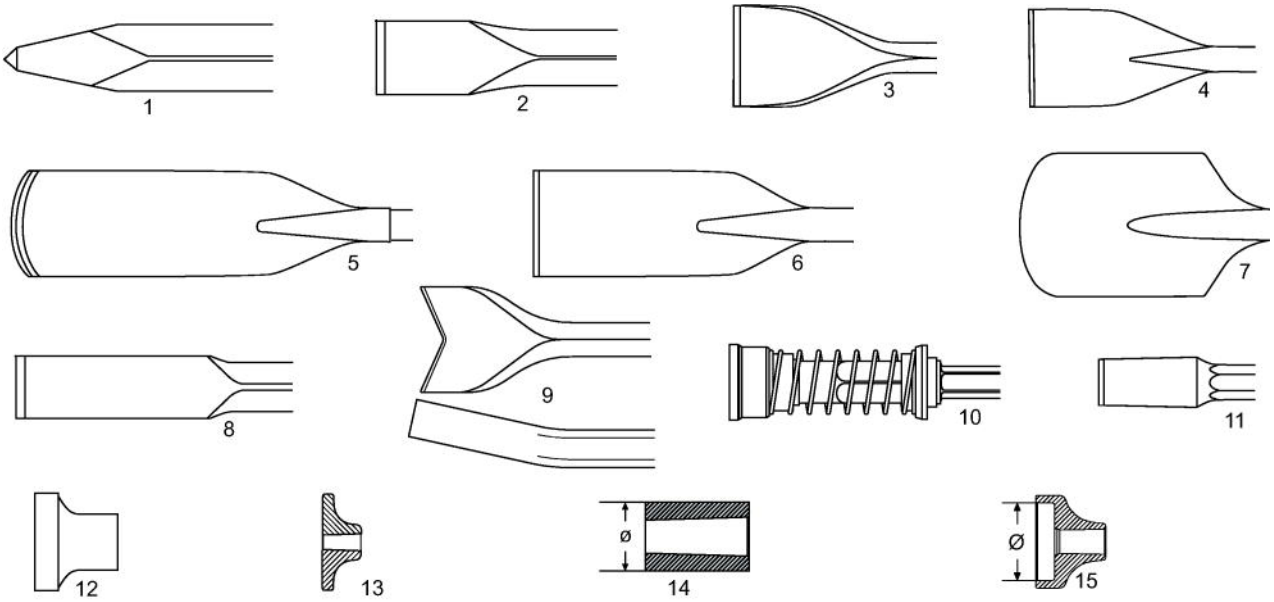

ISO standard hexagon 28 x 160 mm (1⅛ x 6¼ in.)

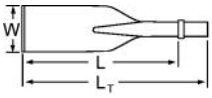

No.	Description	W (mm)	L (mm)	L_T (mm)	Wt (kg)	Part number
1	Moil point	- - -	380 450 1000	545 615 1165	2.8 3.3 6.3	3083 3271 00 3083 3272 00 3083 3273 00
2	Narrow chisel	- - -	380 450 1000	545 615 1165	2.8 3.3 6.3	3083 3274 00 3083 3275 00 3083 3276 00
3	Wide chisel	75	380	545	3.1	3083 3277 00
4	Asphalt cutter	115	300	465	3.6	3083 3278 00
5	Digging chisel	75	380	545	4.0	3083 3279 00
6	Digging spade	125	380	545	4.7	3083 3280 00
7	Clay spade	140	380	545	5.4	3083 3281 00
8	Wedge chisel	40	400	565	3.9	3083 3282 00
9	Tie tamper	100	400	565	4.3	3083 3319 00
11	Shaft for tamping pad	-	230	395	2.8	3083 3283 01
12	Tamping pad, round	180	-	-	7.2	3083 3301 00
13	Tamping pad, square	150 200	- -	- -	8.3 8.5	3083 3302 00 3083 3197 00
14	Driver blank	80	-	-	3.5	9245 2827 10
15	Driver pad	120 150	- -	- -	- -	3376 1120 79 3376 1120 77

© 2010 Atlas Copco Construction Tools AB | No. 9800 0953 01c | 2010-11-12

ISO standard hexagon 32 x 160 mm (1¼ x 6¼ in.)

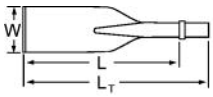

No.	Description	W (mm)	L (mm)	L_T (mm)	Wt (kg)	Part number
1	Moil point	-	380	545	3.5	3083 3205 00
		-	450	615	4.0	3083 3206 00
		-	1000	1165	7.6	3083 3207 00
2	Narrow chisel	-	380	545	3.5	3083 3208 00
		-	450	615	4.0	3083 3209 00
		-	1000	1165	7.6	3083 3210 00
3	Wide chisel	75	380	545	3.7	3083 3211 00
4	Asphalt cutter	115	300	465	3.8	3083 3212 00
5	Digging chisel	75	380	545	4.4	3083 3213 00
6	Digging spade	125	380	545	5.1	3083 3214 00
7	Clay spade	140	380	545	5.4	3083 3215 00
8	Wedge chisel	40	400	565	4.1	3083 3216 00
9	Tie tamper	100	400	565	4.9	3083 3217 00
		100	580	745	6.2	3083 3217 10
10	Spiking tool	-	195	360	4.6	9245 2826 81
11	Shaft for tamping pad	-	235	400	3.2	3083 3218 01
12	Tamping pad, round	180	-	-	7.2	3083 3301 00
13	Tamping pad, square	150	-	-	8.3	3083 3302 00
		200	-	-	8.5	3083 3197 00
14	Driver blank	80	-	-	3.5	9245 2827 10
15	Driver pad	120	-	-	-	3376 1120 79
		150	-	-	-	3376 1120 77

US standard hexagon 1⅛ x 6 in. (28 x 152 mm)

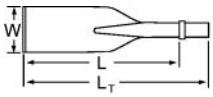

No.	Description	W (in.)	L (in.)	L_T (in.)	Wt (lb)	Part number
1	Moil point	-	14	20	5.7	3083 3267 00
		-	18	24	7.3	3083 4015 10
		-	24	30	9.0	3083 4015 20
2	Narrow chisel	-	14	20	5.7	3083 3268 00
		-	18	24	7.3	3083 4016 10
		-	24	30	9.0	3083 4016 20
3	Wide chisel	3	15	21	6.8	3083 3289 00
		3	18	24	7.9	3083 4017 00
4	Asphalt cutter	5	13	19	7.9	3083 3290 00
		4½	11	18	7.9	3083 4019 00
5	Digging chisel	3	15	21	9.3	3083 3291 00
6	Digging spade	5	13	19	8.4	3083 3292 00
7	Clay spade	5½	15	21	11.0	3083 3293 00
8	Wedge chisel	2	16	22	11.0	3083 3294 00
11	Shaft for tamping pad	-	9	16	6.2	3083 3269 00
12	Tamping pad, round	7	-	-	15.9	3083 3301 00
13	Tamping pad, square	6	-	-	18.3	3083 3302 00
		8	-	-	18.7	3083 3197 00
14	Driver blank	3	-	-	7.7	9245 2827 10
15	Driver pad	4.7	-	-	-	3376 1120 79
		5.9	-	-	-	3376 1120 77

© 2010 Atlas Copco Construction Tools AB | No. 9800 0953 01c | 2010-11-12

US standard hexagon 1¼ x 6 in. (32 x 152 mm)

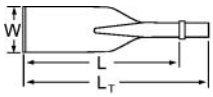

No.	Description	W (in.)	L (in.)	L_T (in.)	Wt (lb)	Part number
1	Moil point	- - -	14 18 24	20 24 30	8 9 11	3083 3285 00 3083 4000 10 3083 4000 20
2	Narrow chisel	- - -	14 18 24	20 24 30	8 9 11	3083 3286 00 3083 4001 10 3083 4001 20
3	Wide chisel	3 3	15 18	21 18	8 8	3083 3295 00 3083 4002 00
4	Asphalt cutter	5 4½	13 12	19 19	9 9	3083 3296 00 3083 4004 00
5	Digging chisel	3	15	21	10	3083 3297 00
6	Digging spade	5	13	22	9	3083 3298 00
7	Clay spade	5½	15	22	11	3083 3299 00
8	Wedge chisel	2	16	22	12	3083 3300 00
9	Tie tamper	4	16	14	10	3083 3314 00
11	Shaft for tamping pad	-	9	16	7	3083 3287 00
12	Tamping pad, round	7	-	-	16	3083 3301 00
13	Tamping pad, square	6 8	- -	- -	18 19	3083 3302 00 3083 3197 00
14	Driver blank	3	-	-	8	9245 2827 10
15	Driver pad	5 6	- -	- -	- -	3376 1120 79 3376 1120 77

Accessories

Accessories

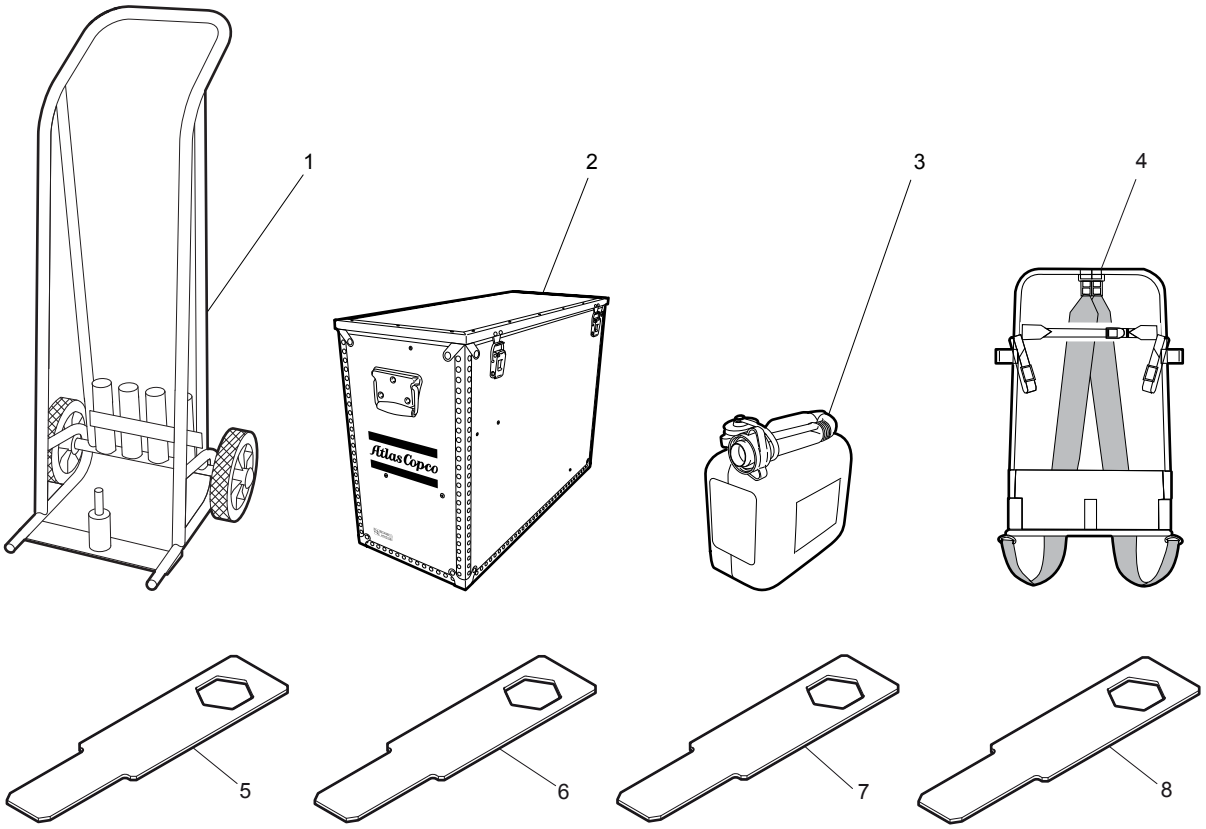

No.	Description	Remark	Quantity	Part number
1	Trolley		1	9234 0006 54
2	Machine box		1	9234 0009 90
3	Fuel can	5.0 litres 1.1 gal	1	9234 0008 97
4	Carrying harness		1	9238 2814 10
5	Template gauge	28 x 152 mm 1⅛ x 6 in.	1	9238 2743 00
6	Template gauge	28 x 160 mm 1⅛ x 6¼ in.	1	9238 2743 10
7	Template gauge	32 x 152 mm 1¼ x 6 in.	1	9238 2738 70
8	Template gauge	32 x 160 mm 1¼ x 6¼ in.	1	9238 2738 80

© 2010 Atlas Copco Construction Tools AB | No. 9800 0953 01c | 2010-11-12

Motor oil

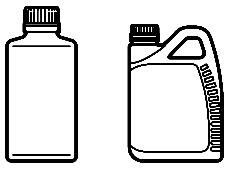

1 2

No.	Description	Remark	Quantity	Part number
1	2-stroke oil (motor oil)	1l (fully synthetic and biodegradeble)	1	9238 2743 50
1	2-stroke oil (motor oil)	1l (fully synthetic and biodegradeble)	12	9234 0014 06
2	Cobra & compactor impact-oil (transmission oil)	1l (for impact and transmission unit)	1	9234 0012 03
2	Cobra & compactor impact-oil (transmission oil)	1l (for impact and transmission unit)	20	9234 0014 05

Kits

Service kit

One month service kit

Part number 9234 0006 87

Description	Remark	Quantity	Part number
Spark plug		1	9234 0004 48
Air filter		1	9234 0001 36

Three months service kit

Part number 9234 0006 88

Description	Remark	Quantity	Part number
One month service kit		1	9234 0006 87
Scraper ring kit		1	9234 0005 54
Gasket		1	9234 0001 28

Six months service kit

Part number 9234 0006 89

Description	Remark	Quantity	Part number
Three months service kit		1	9234 0006 88
O-ring		2	9234 0002 28
O-ring		1	9234 0002 29
O-ring		1	9234 0002 30
Filter		1	9232 2306 00
Piston ring kit		2	9234 0002 71
Gasket		1	9234 0001 27
Gasket		1	9234 0001 37
Plastic bushing		2	9234 0003 35
Plastic bushing		3	9234 0005 75
Gasket		1	9234 0004 13
Gasket		1	9234 0002 67

Twelve months service kit

Part number 9234 0006 90

Description	Remark	Quantity	Part number
Six months service kit		1	9234 0006 89
Bearing and seal kit		1	9234 0003 18
Piston ring		2	9234 0000 07
Gasket		1	9234 0001 26

© 2010 Atlas Copco Construction Tools AB | No. 9800 0953 01c | 2010-11-12

Seal kit

Description	Remark	Quantity	Part number
Complete seal kit	Includes all seals for an overhaul.	1	9234 0006 91
Gasket		1	9234 0001 37
Gasket		1	9234 0004 13
Gasket		1	9234 0002 67
Gasket		1	9234 0001 26
Seal		2	9234 0006 06
Seal		1	9234 0000 74
Gasket, crankcase		1	9234 0004 14
Gasket, transmission		1	9234 0004 15
Seal	1 - ¼ in.	1	9234 0005 17
Seal	1 - ⅛ in.	1	9234 0005 24
Scraper ring kit		1	9234 0005 54
Speed seal		1	-
O-ring		1	-
Lock ring		1	-
Scraper ring		1	-
Support ring		1	9234 0005 36
O-ring		2	9234 0002 28
O-ring		1	9234 0002 29
O-ring		1	9234 0002 30
Piston ring kit		1	9234 0002 71
Piston ring		2	-
O-ring		2	-
Gasket		1	9234 0001 28
O-ring		1	9232 0310 90
Gasket		1	9234 0001 27

Carburettor repair kit

Description	Remark	Quantity	Part number
Carburettor repair kit		1	9234 0009 12
Gasket		1	-
Gasket		1	-
Diaphragm		1	-
Diaphragm		1	-

Part number	Page	No.
0147 1335 03	12 16	63 64
0147 1345 03	12 16	64 65
0147 1347 03	12 16	62 63
0300 0274 74	12 16 19	74 75 10
0301 2318 00	11 15	47 47
0301 2321 00	23	16
0384 3310 00	8	59
3083 3197 00	24 25 26 27	13 13 13 13
3083 3205 00	25	1
3083 3206 00	25	1
3083 3207 00	25	1
3083 3208 00	25	2
3083 3209 00	25	2
3083 3210 00	25	2
3083 3211 00	25	3
3083 3212 00	25	4
3083 3213 00	25	5
3083 3214 00	25	6
3083 3215 00	25	7
3083 3216 00	25	8
3083 3217 00	25	9
3083 3217 10	25	9
3083 3218 01	25	11
3083 3267 00	26	1
3083 3268 00	26	2
3083 3269 00	26	11
3083 3271 00	24	1
3083 3272 00	24	1
3083 3273 00	24	1
3083 3274 00	24	2
3083 3275 00	24	2
3083 3276 00	24	2
3083 3277 00	24	3
3083 3278 00	24	4
3083 3279 00	24	5
3083 3280 00	24	6
3083 3281 00	24	7
3083 3282 00	24	8
3083 3283 01	24	11
3083 3285 00	27	1
3083 3286 00	27	2
3083 3287 00	27	11
3083 3289 00	26	3
3083 3290 00	26	4
3083 3291 00	26	5
3083 3292 00	26	6
3083 3293 00	26	7

Part number	Page	No.
3083 3294 00	26	8
3083 3295 00	27	3
3083 3296 00	27	4
3083 3297 00	27	5
3083 3298 00	27	6
3083 3299 00	27	7
3083 3300 00	27	8
3083 3301 00	24 25 26 27	12 12 12 12
3083 3302 00	24 25 26 27	13 13 13 13
3083 3314 00	27	9
3083 3319 00	24	9
3083 4000 10	27	1
3083 4000 20	27	1
3083 4001 10	27	2
3083 4001 20	27	2
3083 4002 00	27	3
3083 4004 00	27	4
3083 4015 10	26	1
3083 4015 20	26	1
3083 4016 10	26	2
3083 4016 20	26	2
3083 4017 00	26	3
3083 4019 00	26	4
3376 1120 77	24 25 26 27	15 15 15 15
3376 1120 79	24 25 26 27	15 15 15 15
4090 0369 00	20	61
9232 0115 30	7 8	42 55
9232 0118 80	11 11 15 15	9 45 9 45
9232 0120 00	12 16	52 52
9232 0122 00	8	67
9232 0123 51	20	46
9232 0124 00	8	69
9232 0207 50	7 7 8 8 11 11 15 15 23	4 8 81 84 34 35 34 35 15
9232 0208 80	7	32

Part number	Page	No.
9232 0209 00	8 12 16	61 73 74
9232 0310 90	20 31	48
9232 0503 50	8	52
9232 0505 60	20	57
9232 0905 20	12 16	75 76
9232 0905 30	8	51
9232 2228 40	11 12 15 16	20 67 20 68
9232 2306 00	23 30	7
9234 0000 07	11 15 30	4 4
9234 0000 08	11 15	5 5
9234 0000 09	11 15	6 6
9234 0000 19	7	6
9234 0000 20	7	1
9234 0000 26	7	35
9234 0000 32	12 16	69 70
9234 0000 38	11 15	12 12
9234 0000 40	7	46
9234 0000 41	7	47
9234 0000 45	8	50
9234 0000 54	7	48
9234 0000 56	7	11
9234 0000 59	8	49
9234 0000 63	7	33
9234 0000 67	11 15	43 43
9234 0000 69	11 15	42 42
9234 0000 71	11 15	40 40
9234 0000 72	11 15	21 21
9234 0000 74	11 11 15 15 31	19 30 19 30
9234 0000 75	11 15	22 22
9234 0000 76	11 15	27 27
9234 0000 81	8	56
9234 0000 84	8	58
9234 0000 85	8	60
9234 0001 06	11 15	1 1
9234 0001 11	23	35

© 2010 Atlas Copco Construction Tools AB | No. 9800 0953 01c | 2010-11-12

Part number	Page	No.
9234 0001 14	7	39
9234 0001 15	7	43
9234 0001 24	7	28
9234 0001 26	11 15 30 31	7 7
9234 0001 27	20 30 31	49
9234 0001 28	20 30 31	44
9234 0001 36	7 30	38
9234 0001 37	7 30 31	37
9234 0001 43	8	83
9234 0001 44	8	78
9234 0001 45	8	77
9234 0001 54	12 16	70 71
9234 0001 55	12 16	71 72
9234 0001 57	11 15	41 41
9234 0001 58	11 15	39 39
9234 0001 79	19	25
9234 0001 80	11 15	48 48
9234 0002 00	12 16	72 73
9234 0002 01	8	53
9234 0002 05	12 16	51 51
9234 0002 12	23	41
9234 0002 18	23 23 23	17 18 19
9234 0002 28	19 30 31	34
9234 0002 29	19 30 31	35
9234 0002 30	19 30 31	36
9234 0002 45	20	56
9234 0002 55	23	37
9234 0002 65	7	27
9234 0002 67	8 30 31	72
9234 0002 71	19 20 30 31	39 52
9234 0002 78	23	23
9234 0002 79	11 15	26 26
9234 0002 81	12	50
9234 0002 82	11 15	36 36
9234 0002 84	20	63
9234 0002 97	7 23	30 8
9234 0002 98	7	31
9234 0002 99	8	80
9234 0003 00	19	37
9234 0003 01	20	51
9234 0003 04	12 16	66 67
9234 0003 18	11 15 30	13 13
9234 0003 20	11 15	28 28
9234 0003 24	11 15	49 49
9234 0003 32	8	79
9234 0003 35	8 30	86
9234 0003 36	8	82
9234 0003 40	11 15	8 8
9234 0003 43	7	21
9234 0003 45	7	10
9234 0003 54	7	5
9234 0003 96	11 11 15 15 20	18 29 18 29 60
9234 0004 02	8	71
9234 0004 08	20	43
9234 0004 10	8	74
9234 0004 12	20	62
9234 0004 13	8 30 31	70
9234 0004 14	11 15 31	23 23
9234 0004 15	11 15 31	24 24
9234 0004 23	11 12 15 16 20	32 77 32 78 50
9234 0004 48	11 15 30	11 11
9234 0004 69	23	32
9234 0004 84	23	4
9234 0004 85	23	6
9234 0004 86	8	68
9234 0004 87	23	47
9234 0004 90	23	45
9234 0004 91	7	45
9234 0005 10	23 23	27 31
9234 0005 17	19 19 31	20 23
9234 0005 24	19 19 31	14 17
9234 0005 25	23	48
9234 0005 27	11 15	33 33
9234 0005 32	23	36
9234 0005 33	7 8	17 64
9234 0005 35	19	24
9234 0005 36	19 31	32
9234 0005 37	11 15	25 25
9234 0005 44	19	21
9234 0005 47	19	26
9234 0005 48	19	18
9234 0005 49	19	15
9234 0005 50	19	12
9234 0005 54	19 30 31	27
9234 0005 55	19	1
9234 0005 65	23	46
9234 0005 68	23	20
9234 0005 69	23	33
9234 0005 75	12 16 30	76 77
9234 0005 80	19	42
9234 0005 81	8	76
9234 0005 84	23 23 23	12 21 34
9234 0006 01	12 16	58 59
9234 0006 05	23	9
9234 0006 06	11 15 31	15 15
9234 0006 18	20	58
9234 0006 19	7	12
9234 0006 37	19	3
9234 0006 47	23	1
9234 0006 52	16	82
9234 0006 54	28	1
9234 0006 60	16	50
9234 0006 65	16	83
9234 0006 68	16	81
9234 0006 74	8	73

Part number	Page	No.
9234 0006 86	7	40
9234 0006 87	30	
9234 0006 88	30	
9234 0006 89	30	
9234 0006 91	31	
9234 0007 50	23	11
9234 0008 97	28	3
9234 0009 09	12 16 23	78 79 10
9234 0009 12	31	
9234 0009 23	7	3
9234 0009 90	28	2
9234 0009 95	7	14
9234 0009 97	7	15
9234 0010 04	19	11
9234 0010 08	7	18
9234 0010 09	7	22
9234 0010 29	8	62
9234 0010 30	7	36
9234 0012 03	29	2
9234 0012 04	16	84
9234 0014 01	16	85
9234 0014 05	29	2
9234 0014 06	29	1
9234 0014 19	11 15	2 3
9234 0014 20	11 15	3 2
9234 0015 11	8	75
9234 0015 19	23	2
9234 0015 45	8	65
9234 0015 49	11 15	44 44
9238 2738 70	28	7
9238 2738 80	28	8
9238 2743 00	28	5
9238 2743 10	28	6
9238 2743 50	29	1
9238 2814 10	28	4
9245 2826 81	25	10
9245 2827 10	24 25 26 27	14 14 14 14

© 2010 Atlas Copco Construction Tools AB | No. 9800 0953 01c | 2010-11-12

Any unauthorized use or copying of the contents or any part thereof is prohibited. This applies in particular to trademarks, model denominations, part numbers, and drawings.

© 2010 Atlas Copco Construction Tools AB | No. 9800 0953 01c | 2010-11-12

Atlas Copco

www.atlascopco.com