Haas Automation,Inc.

Lathe Operator's Manual

Next Generation Control
96-8910
Revision N
December 2020
English
Original Instructions

Haas Automation Inc.
2800 Sturgis Road
Oxnard, CA 93030-8933
U.S.A. | HaasCNC.com

© 2020 Haas Automation, Inc. All Rights Reserved. Copy by Permission Only. Copyright Strictly Enforced.

© 2020 Haas Automation, Inc.

All rights reserved. No part of this publication may be reproduced, stored in a retrieval system, or transmitted, in any form, or by any means, mechanical, electronic, photocopying, recording, or otherwise, without the written permission of Haas Automation, Inc. No patent liability is assumed with respect to the use of the information contained herein. Moreover, because Haas Automation strives constantly to improve its high-quality products, the information contained in this manual is subject to change without notice. We have taken every precaution in the preparation of this manual; nevertheless, Haas Automation assumes no responsibility for errors or omissions, and we assume no liability for damages resulting from the use of the information contained in this publication.

This product uses Java Technology from Oracle Corporation and we request that you acknowledge that Oracle owns the Java Trademark and all Java related Trademarks and agree to comply with the trademark guidelines at www.oracle.com/us/legal/third-party-trademarks/index.html.

Any further distribution of the Java programs (beyond this appliance/machine) is subject to a legally binding End User License Agreement with Oracle. Any use of the commercial features for production purposes requires a separate license from Oracle.

LIMITED WARRANTY CERTIFICATE

Haas Automation, Inc.

Covering Haas Automation, Inc. CNC Equipment

Effective September 1, 2010

Haas Automation Inc. (“Haas” or “Manufacturer”) provides a limited warranty on all new mills, turning centers, and rotary machines (collectively, “CNC Machines”) and their components (except those listed below under Limits and Exclusions of Warranty) (“Components”) that are manufactured by Haas and sold by Haas or its authorized distributors as set forth in this Certificate. The warranty set forth in this Certificate is a limited warranty, it is the only warranty by Manufacturer, and is subject to the terms and conditions of this Certificate.

Limited Warranty Coverage

Each CNC Machine and its Components (collectively, “Haas Products”) are warranted by Manufacturer against defects in material and workmanship. This warranty is provided only to an end-user of the CNC Machine (a “Customer”). The period of this limited warranty is one (1) year. The warranty period commences on the date the CNC Machine is installed at the Customer’s facility. Customer may purchase an extension of the warranty period from an authorized Haas distributor (a “Warranty Extension”), any time during the first year of ownership.

Repair or Replacement Only

Manufacturer’s sole liability, and Customer’s exclusive remedy under this warranty, with respect to any and all Haas products, shall be limited to repairing or replacing, at the discretion of the Manufacturer, the defective Haas product.

Disclaimer of Warranty

This warranty is Manufacturer’s sole and exclusive warranty, and is in lieu of all other warranties of whatever kind or nature, express or implied, written or oral, including, but not limited to, any implied warranty of merchantability, implied warranty of fitness for a particular purpose, or other warranty of quality or performance or noninfringement. All such other warranties of whatever kind are hereby disclaimed by Manufacturer and waived by Customer.

Limits and Exclusions of Warranty

Components subject to wear during normal use and over time, including, but not limited to, paint, window finish and condition, light bulbs, seals, wipers, gaskets, chip removal system (e.g., augers, chip chutes), belts, filters, door rollers, tool changer fingers, etc., are excluded from this warranty. Manufacturer's specified maintenance procedures must be adhered to and recorded in order to maintain this warranty. This warranty is void if Manufacturer determines that (i) any Haas Product was subjected to mishandling, misuse, abuse, neglect, accident, improper installation, improper maintenance, improper storage, or improper operation or application, including the use of improper coolants or other fluids, (ii) any Haas Product was improperly repaired or serviced by Customer, an unauthorized service technician, or other unauthorized person, (iii) Customer or any person makes or attempts to make any modification to any Haas Product without the prior written authorization of Manufacturer, and/or (iv) any Haas Product was used for any non-commercial use (such as personal or household use). This warranty does not cover damage or defect due to an external influence or matters beyond the reasonable control of Manufacturer, including, but not limited to, theft, vandalism, fire, weather condition (such as rain, flood, wind, lightning, or earthquake), or acts of war or terrorism.

Without limiting the generality of any of the exclusions or limitations described in this Certificate, this warranty does not include any warranty that any Haas Product will meet any person's production specifications or other requirements, or that operation of any Haas Product will be uninterrupted or error-free. Manufacturer assumes no responsibility with respect to the use of any Haas Product by any person, and Manufacturer shall not incur any liability to any person for any failure in design, production, operation, performance, or otherwise of any Haas Product, other than repair or replacement of same as set forth in the warranty above.

Limitation of Liability and Damages

Manufacturer will not be liable to Customer or any other person for any compensatory, incidental, consequential, punitive, special, or other damage or claim, whether in an action in contract, tort, or other legal or equitable theory, arising out of or related to any Haas product, other products or services provided by Manufacturer or an authorized distributor, service technician, or other authorized representative of Manufacturer (collectively, "authorized representative"), or the failure of parts or products made by using any Haas Product, even if Manufacturer or any authorized representative has been advised of the possibility of such damages, which damage or claim includes, but is not limited to, loss of profits, lost data, lost products, loss of revenue, loss of use, cost of down time, business good will, any damage to equipment, premises, or other property of any person, and any damage that may be caused by a malfunction of any Haas product. All such damages and claims are disclaimed by Manufacturer and waived by Customer. Manufacturer's sole liability, and Customer's exclusive remedy, for damages and claims for any cause whatsoever shall be limited to repair or replacement, at the discretion of Manufacturer, of the defective Haas Product as provided in this warranty.

Customer has accepted the limitations and restrictions set forth in this Certificate, including, but not limited to, the restriction on its right to recover damages, as part of its bargain with Manufacturer or its Authorized Representative. Customer realizes and acknowledges that the price of the Haas Products would be higher if Manufacturer were required to be responsible for damages and claims beyond the scope of this warranty.

Entire Agreement

This Certificate supersedes any and all other agreements, promises, representations, or warranties, either oral or in writing, between the parties or by Manufacturer with respect to subject matter of this Certificate, and contains all of the covenants and agreements between the parties or by Manufacturer with respect to such subject matter. Manufacturer hereby expressly rejects any other agreements, promises, representations, or warranties, either oral or in writing, that are in addition to or inconsistent with any term or condition of this Certificate. No term or condition set forth in this Certificate may be modified or amended, unless by a written agreement signed by both Manufacturer and Customer. Notwithstanding the foregoing, Manufacturer will honor a Warranty Extension only to the extent that it extends the applicable warranty period.

Transferability

This warranty is transferable from the original Customer to another party if the CNC Machine is sold via private sale before the end of the warranty period, provided that written notice thereof is provided to Manufacturer and this warranty is not void at the time of transfer. The transferee of this warranty will be subject to all terms and conditions of this Certificate.

Miscellaneous

This warranty shall be governed by the laws of the State of California without application of rules on conflicts of laws. Any and all disputes arising from this warranty shall be resolved in a court of competent jurisdiction located in Ventura County, Los Angeles County, or Orange County, California. Any term or provision of this Certificate that is invalid or unenforceable in any situation in any jurisdiction shall not affect the validity or enforceability of the remaining terms and provisions hereof, or the validity or enforceability of the offending term or provision in any other situation or in any other jurisdiction.

Customer Feedback

If you have concerns or questions regarding this Operator's Manual, please contact us on our website, www.HaasCNC.com. Use the "Contact Us" link and send your comments to the Customer Advocate.

Join Haas owners online and be a part of the greater CNC community at these sites:

haasparts.com
Your Source for Genuine Haas Parts

www.facebook.com/HaasAutomationInc
Haas Automation on Facebook

www.twitter.com/Haas_Automation
Follow us on Twitter

www.linkedin.com/company/haas-automation
Haas Automation on LinkedIn

www.youtube.com/user/haasautomation
Product videos and information

www.flickr.com/photos/haasautomation
Product photos and information

Customer Satisfaction Policy

Dear Haas Customer,

Your complete satisfaction and goodwill are of the utmost importance to both Haas Automation, Inc. and the Haas distributor (HFO) where you purchased your equipment. Normally, your HFO will rapidly resolve any concerns you have about your sales transaction or the operation of your equipment.

However, if your concerns are not resolved to your complete satisfaction, and you have discussed your concerns with a member of the HFO's management, the General Manager, or the HFO's owner directly, please do the following:

Contact Haas Automation's Customer Service Advocate at 805-988-6980. So that we may resolve your concerns as quickly as possible, please have the following information available when you call:

- Your company name, address, and phone number
- The machine model and serial number
- The HFO name, and the name of your latest contact at the HFO
- The nature of your concern

If you wish to write Haas Automation, please use this address:

Haas Automation, Inc. U.S.A.
2800 Sturgis Road
Oxnard CA 93030
Att: Customer Satisfaction Manager
email: customerservice@HaasCNC.com

Once you contact the Haas Automation Customer Service Center, we will make every effort to work directly with you and your HFO to quickly resolve your concerns. At Haas Automation, we know that a good Customer-Distributor-Manufacturer relationship will help ensure continued success for all concerned.

International:

Haas Automation, Europe
Mercuriusstraat 28, B-1930
Zaventem, Belgium
email: customerservice@HaasCNC.com

Haas Automation, Asia
No. 96 Yi Wei Road 67,
Waigaoqiao FTZ
Shanghai 200131 P.R.C.
email: customerservice@HaasCNC.com

Declaration of Conformity

Product: CNC Lathes (Turning Centers)*

*Including all options factory- or field-installed by a certified Haas Factory Outlet (HFO)

Manufactured By: Haas Automation, Inc.

2800 Sturgis Road, Oxnard CA 93030

805-278-1800

We declare, in sole responsibility, that the above-listed products, to which this declaration refers, comply with the regulations as outlined in the CE directive for Machining Centers:

- Machinery Directive 2006 /42/EC
- Low Voltage Directive 2014/35/EC
- Additional Standards:
  - IEC 60204-1:2016
  - EN 614-1:2006+A1:2009
  - EN 894-1:1997+A1:2008
  - EN ISO 13849-1:2015
  - ISO 10218:1-2:2011 (if robot included)

RoHS2: COMPLIANT (2011/65/EU) by Exemption per producer documentation.

Exempt by:

a) Large scale stationary industrial tool.
b) Lead as an alloying element in steel, aluminum, and copper.
c) Cadmium and its compounds in electrical contacts.

Person authorized to compile technical file:

Kristine De Vriese

Address:

Haas Automation Europe
Mercuriusstraat 28
B-1930 Zaventem
Belgium

USA: Haas Automation certifies this machine to be in compliance with the OSHA and ANSI design and manufacturing standards listed below. Operation of this machine will be compliant with the below-listed standards only as long as the owner and operator continue to follow the operation, maintenance, and training requirements of these standards.

- *OSHA 1910.212 - General Requirements for All Machines*
- *ANSI B11.5-1984 (R1994) Lathes*
- *ANSI B11.19-2019 Performance Requirements for Risk Reduction Measures*
- *ANSI B11.22-2002 Safety Requirements for Turning Centers and Automatic Numerically Controlled Turning Machines*
- *ANSI B11.TR3-2000 Risk Assessment and Risk Reduction - A Guideline to Estimate, Evaluate, and Reduce Risks Associated with Machine Tools*

CANADA: As the original equipment manufacturer, we declare that the listed products comply with regulations as outlined in the Pre-Start Health and Safety Reviews Section 7 of Regulation 851 of the Occupational Health and Safety Act Regulations for Industrial Establishments for machine guarding provisions and standards.

Further, this document satisfies the notice-in-writing provision for exemption from Pre-Start inspection for the listed machinery as outlined in the Ontario Health and Safety Guidelines, PSR Guidelines dated November 2016. The PSR Guidelines allow that notice in writing from the original equipment manufacturer declaring conformity to applicable standards is acceptable for the exemption from Pre-Start Health and Safety Review.

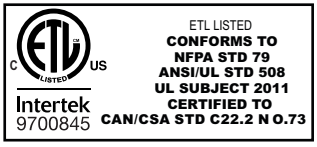

All Haas CNC machine tools carry the ETL Listed mark, certifying that they conform to the NFPA 79 Electrical Standard for Industrial Machinery and the Canadian equivalent, CAN/CSA C22.2 No. 73. The ETL Listed and cETL Listed marks are awarded to products that have successfully undergone testing by Intertek Testing Services (ITS), an alternative to Underwriters' Laboratories.

Haas Automation has been assessed for conformance with the provisions set forth by ISO 9001: 2015. Scope of Registration: Design and Manufacture of CNC Machines Tools and Accessories, Sheet Metal Fabrication. The conditions for maintaining this certificate of registration are set forth in ISA's Registration Policies 5.1. This registration is granted subject to the organization maintaining compliance to the noted stardard. The validity of this certificate is dependent upon ongoing surveillance audits.

Original Instructions

User’s Operator Manual and other Online Resources

This manual is the operation and programming manual that applies to all Haas Lathes.

An English language version of this manual is supplied to all customers and is marked **"Original Instructions"**.

For many other areas of the world, there is a translation of this manual marked **"Translation of Original Instructions"**.

This manual contains an unsigned version of the EU required **"Declaration Of Conformity"**. European customers are provided a signed English version of the Declaration of Conformity with Model Name and Serial Number.

Besides this manual, there is a tremendous amount of additional information online at: www.haascnc.com under the Service section.

Both this manual and the translations of this manual are available online for machines up to approximately 15 years old.

The CNC control of your machine also contains all of this manual in many languages and can be found by passing the **[HELP]** button.

Many machine models come with manual supplement that is also available online.

All machine options also have additional information online.

Maintenance and service information is available online.

The online **"Installation Guide"** contains information and check list for Air & Electrical requirements, Optional Mist Extractor, Shipping Dimensions, weight, Lifting Instructions, foundation and placement, etc.

Guidance on proper coolant and Coolant Maintenance is located in the Operators Manual and Online.

Air and Pneumatic diagrams are located on the inside of the lubrication panel door and CNC control door.

Lubrication, grease, oil and hydraulic fluid types are listed on a decal on the machine's lubrication panel.

How to Use This Manual

To get the maximum benefit of your new Haas machine, read this manual thoroughly and refer to it often. The content of this manual is also available on your machine control under the HELP function.

IMPORTANT: Before you operate the machine, read and understand the Operator's Manual Safety chapter.

Declaration of Warnings

Throughout this manual, important statements are set off from the main text with an icon and an associated signal word: "Danger," "Warning," "Caution," or "Note." The icon and signal word indicate the severity of the condition or situation. Be sure to read these statements and take special care to follow the instructions.

Description	Example
Danger means that there is a condition or situation that **will cause death or severe injury** if you do not follow the instructions given.	***DANGER:*** *No step. Risk of electrocution, bodily injury, or machine damage. Do not climb or stand on this area.*
Warning means that there is a condition or situation that **will cause moderate injury** if you do not follow the instructions given.	***WARNING:*** *Never put your hands between the tool changer and the spindle head.*
Caution means that **minor injury or machine damage could occur** if you do not follow the instructions given. You may also have to start a procedure over if you do not follow the instructions in a caution statement.	***CAUTION:*** *Power down the machine before you do maintenance tasks.*
Note means that the text gives **additional information, clarification, or helpful hints.**	***NOTE:*** *Follow these guidelines if the machine is equipped with the optional extended Z-clearance table.*

Text Conventions Used in this Manual

Description	Text Example
Code Block text gives program examples.	`G00 G90 G54 X0. Y0.;`
A **Control Button Reference** gives the name of a control key or button that you are to press.	Press **[CYCLE START]**.
A **File Path** describes a sequence of file system directories.	*Service* > *Documents and Software* >...
A **Mode Reference** describes a machine mode.	MDI
A **Screen Element** describes an object on the machine's display that you interact with.	Select the **SYSTEM** tab.
System Output describes text that the machine control displays in response to your actions.	`PROGRAM END`
User Input describes text that you should enter into the machine control.	`G04 P1.;`
Variable n indicates a range of non-negative integers from 0 to 9.	`Dnn` represents `D00` through `D99`.

Contents

User's Operator Manual and other Online Resources xi
How to Use This Manual xii

Chapter 1 **Safety 1**
1.1 General Safety Notes 1
1.1.1 Summary of Types of Operation for Haas Automation Machine Tools 2
1.1.2 Read Before Operating 4
1.1.3 Machine Environmental Limits 8
1.1.4 Machine Noise Limits 8
1.2 Unattended Operation 9
1.3 Door Rules - Run / Setup Mode 9
1.3.1 Robot Cells 12
1.4 Haas Robot Package 12
1.5 Mist Extraction / Enclosure Evacuation 14
1.6 Spindle Safety Limit 14
1.7 Modifications to the Machine 15
1.8 Improper Coolants 16
1.9 Safety Decals 16
1.9.1 Decal Symbols Reference 17
1.9.2 Other Safety Information 21
1.9.3 More Information Online 21

Chapter 2 **Introduction 23**
2.1 Lathe Overview 23
2.2 Control Pendant 29
2.2.1 Pendant Front Panel 30
2.2.2 Pendant Right Side, and Top Panels 31
2.2.3 Keyboard 32
2.2.4 Control Display 44
2.2.5 Screen Capture 70
2.2.6 Error Report 70
2.3 Tabbed Menu Basic Navigation 71
2.4 LCD Touchscreen Overview 71
2.4.1 LCD Touchscreen - Navigation Tiles 73
2.4.2 LCD Touchscreen - Selectable Boxes 75
2.4.3 LCD Touchscreen - Virtual Keyboard 77

2.4.4 LCD Touchscreen - Program Editing . . . 78
2.4.5 LCD Touchscreen - Maintenance . . . 79
2.5 Help . . . 79
2.5.1 Active Icon Help . . . 80
2.5.2 Active Window Help . . . 80
2.5.3 Active Window Commands . . . 80
2.5.4 Help Index . . . 80
2.6 More Information Online . . . 80

Chapter 3 **Control Icons . . . 81**
3.1 Next Generation Control Icon Guide . . . 81
3.2 More Information Online . . . 95

Chapter 4 **Operation . . . 97**
4.1 Machine Power-On . . . 97
4.2 Spindle Warm-Up . . . 99
4.3 Device Manager ([LIST PROGRAM]) . . . 99
4.3.1 Device Manager Operation . . . 100
4.3.2 File Display Columns . . . 101
4.3.3 Create a New Program . . . 102
4.3.4 Create A Container . . . 103
4.3.5 Select the Active Program . . . 104
4.3.6 Check Mark Selection . . . 104
4.3.7 Copy Programs . . . 104
4.3.8 Edit a Program . . . 105
4.3.9 File Commands . . . 106
4.4 Screen Capture . . . 107
4.5 Error Report . . . 107
4.6 Full Machine Backup . . . 108
4.6.1 Selected Machine Data Backup . . . 111
4.6.2 Restoring a Full Machine Backup . . . 112
4.7 Running Programs . . . 113
4.8 Locate the Last Program Error . . . 113
4.9 Safe Run Mode . . . 114
4.10 RJH-Touch Overview . . . 116
4.10.1 RJH-Touch Operation Mode Menu . . . 118
4.10.2 RJH-Touch Manual Jogging . . . 119
4.10.3 Tool Offsets with RJH-Touch . . . 119
4.10.4 Work Offsets with the RJH-Touch . . . 120
4.11 Part Setup . . . 121
4.11.1 Jog Mode . . . 122
4.11.2 Tool Offsets . . . 123
4.11.3 Setting the Tool Offset . . . 128

4.11.4 Work Offsets . . . 129
4.11.5 Setting the Work Offset . . . 130
4.12 Chuck and Collet Replacement . . . 130
4.12.1 Chuck Installation . . . 130
4.12.2 Chuck Removal . . . 131
4.12.3 Chuck/Drawtube Warnings . . . 132
4.12.4 Collet Installation. . . . 133
4.12.5 Collet Removal. . . . 133
4.12.6 Chuck Foot Pedal . . . 134
4.12.7 Steady Rest Foot Pedal . . . 134
4.13 Drawtube Operation . . . 135
4.13.1 Clamping Force Adjustment Procedure . . . 135
4.13.2 Drawtube Cover Plate . . . 136
4.14 Tooling . . . 136
4.14.1 Advanced Tool Management Introduction . . . 136
4.15 Tool Turret Operations . . . 139
4.15.1 Air Pressure . . . 140
4.15.2 Eccentric Locating Cam Buttons . . . 140
4.15.3 Protective Cap . . . 140
4.15.4 Tool Load or Tool Change . . . 141
4.15.5 Hybrid Turret, VDI, and BOT Centerline Offset . . . 141
4.16 Tailstock Setup and Operation . . . 142
4.16.1 Tailstock Types . . . 142
4.16.2 ST-10 Tailstock Operation . . . 142
4.16.3 Hydraulic Tailstock (ST-20/30). . . . 142
4.16.4 ST-40 Servo Tailstock Operation . . . 143
4.16.5 ST-20/30/40 Tailstock Operation . . . 144
4.16.6 Tailstock Settings . . . 144
4.16.7 Tailstock Foot Pedal Operation . . . 145
4.16.8 Tailstock Restricted Zone . . . 145
4.16.9 Jogging the Tailstock . . . 146
4.17 Dual Action - Parts Catcher - Setup . . . 147
4.18 Features . . . 148
4.18.1 Graphics Mode. . . . 149
4.18.2 Axis Overload Timer . . . 150
4.19 Run-Stop-Jog-Continue . . . 150
4.20 Haas Robot Interface - Introduction . . . 151
4.20.1 Haas Robot Package - Installation. . . . 152
4.20.2 Haas Robot - Quick Start Guide . . . 152
4.21 More Information Online . . . 153

Chapter 5 Programming . . . 155
5.1 Create / Select Programs for Editing . . . 155

5.2 Program Edit Modes . . . 155
5.2.1 Basic Program Editing . . . 155
5.2.2 Manual Data Input (MDI) . . . 158
5.2.3 Program Editor . . . 159
5.3 Tips and Tricks . . . 163
5.3.1 Tips and Tricks - Programming . . . 163
5.3.2 Offsets . . . 165
5.3.3 Settings . . . 165
5.3.4 Operation . . . 166
5.3.5 Calculator . . . 167
5.4 Basic Programming . . . 167
5.4.1 Preparation . . . 168
5.4.2 Cutting . . . 170
5.4.3 Completion . . . 170
5.4.4 Absolute vs. Incremental (XYZ vs. UVW) . . . 171
5.5 Miscellaneous Codes . . . 171
5.5.1 Tool Functions . . . 171
5.5.2 Spindle Commands . . . 172
5.5.3 Program Stop Commands . . . 173
5.5.4 Coolant Commands . . . 173
5.6 Cutting G-codes . . . 173
5.6.1 Linear Interpolation Motion . . . 173
5.6.2 Circular Interpolation Motion . . . 174
5.7 Tool Nose Compensation . . . 175
5.7.1 Tool Nose Compensation - Programming . . . 176
5.7.2 Tool Nose Compensation Concept . . . 177
5.7.3 Using Tool Nose Compensation . . . 178
5.7.4 Approach and Departure Moves For TNC . . . 179
5.7.5 Tool Nose Radius and Wear Offset . . . 180
5.7.6 Tool Nose Compensation and Tool Length Geometry . . . 182
5.7.7 Tool Nose Compensation in Canned Cycles . . . 182
5.7.8 Example Programs Using Tool Nose Compensation . . . 182
5.7.9 Imaginary Tool Tip and Direction . . . 191
5.7.10 Programming Without Tool Nose Compensation . . . 192
5.7.11 Manually Calculating Compensation . . . 193
5.7.12 Tool Nose Compensation Geometry . . . 193
5.8 Coordinate Systems . . . 206
5.8.1 Effective Coordinate System . . . 206
5.8.2 Automatic Setting of Tool Offsets . . . 207
5.8.3 Global Coordinate System (G50) . . . 207
5.9 Tailstock Setup and Operation . . . 207
5.10 Subprograms . . . 207
5.11 Setting Up Search Locations . . . 208

5.12 More Information Online 209

Chapter 6 **Options Programming 211**
6.1 Introduction 211
6.2 Automatic Tool Presetter (ATP) 211
6.2.1 Automatic Tool Presetter (ATP) - Alignment 211
6.2.2 Automatic Tool Presetter (ATP) - Test 214
6.2.3 Automatic Tool Presetter (ATP) - Calibration 219
6.3 C Axis 223
6.3.1 Cartesian to Polar Transformation (G112) 223
6.3.2 Cartesian Interpolation 225
6.4 Dual-Spindle Lathes (DS-Series) 227
6.4.1 Synchronized Spindle Control 228
6.4.2 Secondary Spindle Programming 230
6.5 Feature List 231
6.5.1 Purchased Options Enable/Disable 232
6.5.2 Option Tryout 232
6.6 Live Tooling 233
6.6.1 Live Tooling Introduction 233
6.6.2 Live Tooling Cutting Tool Installation 233
6.6.3 Live Tool Mounting in Turret 234
6.6.4 Live Tooling M-codes 235
6.7 Macros (Optional) 236
6.7.1 Macros Introduction 236
6.7.2 Operation Notes 238
6.7.3 System Variables In-Depth 252
6.7.4 Variable Usage 265
6.7.5 Address Substitution 265
6.7.6 Communication With External Devices - DPRNT[ ] . . . 277
6.7.7 G65 Macro Subprogram Call Option (Group 00) 280
6.7.8 Aliasing 281
6.8 Shape Creator 283
6.8.1 Using Shape Creator 284
6.8.2 Using Shape Creator - VPS Template 286
6.9 Visual Programming System (VPS) 288
6.9.1 VPS Example 289
6.10 Y Axis 290
6.10.1 Y-Axis Travel Envelopes 291
6.10.2 Y-Axis Lathe with VDI Turret 291
6.10.3 Operation and Programming 291
6.11 More Information Online 295

Chapter 7 **G-codes** **297**
7.1 Introduction 297
7.1.1 List of G-codes 297
7.2 More Information Online 390

Chapter 8 **M-codes** **391**
8.1 Introduction 391
8.1.1 List of M-codes 391
8.2 More Information Online 413

Chapter 9 **Settings** **415**
9.1 Introduction 415
9.1.1 List of Settings 415
9.2 Network Connection 463
9.2.1 Network Icon Guide 465
9.2.2 Network Connection Terms and Responsibilities 466
9.2.3 Wired Connection Setup 467
9.2.4 Wired Network Settings 468
9.2.5 Wireless Connection Setup 468
9.2.6 Wireless Network Settings 471
9.2.7 Net Share Settings 471
9.2.8 Haas Drop 473
9.2.9 Haas Connect 474
9.2.10 Remote Display View 474
9.2.11 Machine Data Collection 476
9.3 User Positions 479
9.4 More Information Online 481

Chapter 10 **Other Equipment** **483**
10.1 Chucker Lathe 483
10.2 Dual-Spindle Lathes 483
10.3 Haas Bar feeder 483
10.4 Toolroom Lathe 483
10.5 More Information Online 484

Index **485**

Chapter 1: Safety

1.1 General Safety Notes

CAUTION: *Only authorized and trained personnel may operate this equipment. You must always act in accordance with the Operator's manual, safety decals, safety procedures, and instructions for safe machine operation. Untrained personnel present a hazard to themselves and the machine.*

IMPORTANT: *Do not operate this machine until you have read all warnings, cautions, and instructions.*

CAUTION: *The sample programs in this manual have been tested for accuracy, but they are for illustrative purposes only. The programs do not define tools, offsets, or materials. They do not describe workholding or other fixturing. If you choose to run a sample program on your machine, do so in Graphics mode. Always follow safe machining practices when you run an unfamiliar program.*

All CNC machines contain hazards from rotating work, loosely clamped parts, belts and pulleys, high voltage electricity, noise, and compressed air. You must always follow basic safety precautions to reduce the risk of personal injury and mechanical damage.

The work area must be adequately illuminated to allow clear view and safe operation of the machine. This includes the operator work area and all areas of the machine that might be accessed during maintenance or cleaning. Adequate illumination is the responsibility of the user.

Cutting tools, workholding, workpiece and coolant are beyond the scope and control of Haas Automation, Inc. Each of these potential hazards associated with it (sharp edges, heavy lifting considerations, chemical composition, etc) and it is the responsibility of the user to take appropriate action (PPE, training, etc).

Cleaning of the machine is required during normal use and prior to maintenance or repair. Optional equipment is available to aid cleaning such as washdown hoses, chip conveyors and chip augers. Safe use of this equipment requires training and might require appropriate PPE and is the responsibility of the user.

This operator’s manual is intended as a reference guide and is not to be the sole source of training. Complete operator training is available from the authorized Haas distributor.

1.1.1 Summary of Types of Operation for Haas Automation Machine Tools

Haas CNC Lathes are intended for cutting and shaping of metals and other hard materials. They are general purpose in nature and a list of all of those materials and types of cutting would never be complete. Almost all cutting and shaping is performed by a rotating part clamped in a chuck. The tools are held on a turret. Some cutting operations require liquid coolant. That coolant is also an option depending on the type of cutting.

Operations of Haas Lathes are separated into three areas. They are: Operations, Maintenance, and Service. Operations and Maintenance are intended to be performed by a trained and qualified machine operator. This Operator's Manual contains some of the information necessary to operate the machine. All other machine operations are to be considered Service. Service is only to be performed by specially trained service personnel.

Operation of this machine consists of the following:

1. Machine Setup
    - Machine setup is done to initially set up the tools, offsets, and fixtures required to perform a repetitive function that later is called machine operation. Some machine setup functions can be done with the door open but are limited to “hold to run”.
2. Machine operating in Automatic Mode
    - Automatic operation is initiated with Cycle-Start and can only be done with the doors closed.
3. Operator loading and unloading of materials (parts)
    - Parts loading and unloading is what precedes and follows an automatic operation. This must be done with the doors open and all machine automatic motion is stopped when the door is open.
4. Operator loading and unloading of cutting tools
    - Tool loading and unloading is done less often than setup. It is often required when a tool has become worn and must be replaced.

Maintenance only consists of the following:

1. Adding and maintaining condition of coolant
    - Adding coolant and maintaining coolant concentration is required at regular intervals. This is a normal operator function and is either done from a safe location outside of the work enclosure or with the doors open and the machine stopped.

2. Adding lubricants

    - Adding lubricants for spindle and axes is required at regular intervals. These are often months or years in length. This is a normal operator function and is always done from a safe location outside of the work enclosure.

3. Cleaning chips out of the machine

    - Cleaning out of chips is required at intervals dictated by the type of machining performed. This is a normal operator function. It is performed with the doors open and all of the machine operation is stopped.

Service only consists of the following:

1. Repairing of a machine that is not operating correctly

    - Any machine that is not operating correctly requires service by factory trained personnel. This is never an operator function. It is not considered maintenance. Installation and service instructions are provided separately from the Operator's Manual.

2. Machine moving, unpacking, and installation

    - Haas machines are shipped to a user's location almost ready to operate. They still require a trained service person to complete the installation. Installation and service instructions are provided separately from the Operator's Manual.

3. Machine packing

    - Machine packing for shipment requires the same packing material supplied by Haas in the original shipment. Packing requires a trained service person to complete the installation. Shipping instructions are provided separately from the Operator's Manual.

4. Decommission, dismantle and disposal

    - Machine is not expected to be disassembled for shipment; it can be moved in its entirety in the same manner in which it was installed. Machine can be returned to the manufacturer's distributor for disposal; manufacturer accepts any/all components for recycling per Directive 2002/96/EC.

5. End-of-life disposal

    - End-of-life disposal must conform to the laws and regulations in the region the machine is located. This is a jointly the responsibility of the owner and seller of the machine. The risk analysis does not address this phase.

1.1.2 Read Before Operating

DANGER: *Do not enter the machining area any time the machine is in motion, or at any time that machine motion is possible. Severe injury or death may result. Motion is possible when the power is on and the machine is not in* **[EMERGENCY STOP]**.

Basic safety:

- This machine can cause severe bodily injury.
- This machine is automatically controlled and may start at any time.
- Consult your local safety codes and regulations before you operate the machine. Contact your dealer if you have questions about safety issues.
- It is the machine owner's responsibility to make sure that everyone who is involved in installing and operating the machine is fully acquainted with the operation and safety instructions provided with the machine, BEFORE they work with the machine. The ultimate responsibility for safety rests with the machine owner and the individuals who work with the machine.
- Use appropriate eye and ear protection when you operate the machine.
- Use appropriate gloves to remove processed material and to clean the machine.
- Replace windows immediately if they are damaged or severely scratched.

Electrical safety:

- The electrical power must meet the required specifications. Attempting to run the machine from any other source can cause severe damage and will void the warranty.
- The electrical panel should be closed and the key and latches on the control cabinet should be secured at all times, except during installation and service. At those times, only qualified electricians should have access to the panel. When the main circuit breaker is on, there is high voltage throughout the electrical panel (including the circuit boards and logic circuits) and some components operate at high temperatures; therefore, extreme caution is required. Once the machine is installed, the control cabinet must be locked, with the key available only to qualified service personnel.
- Do not reset a circuit breaker until the reason for the fault is investigated and understood. Only Haas-trained service personnel should troubleshoot and repair Haas equipment.
- Do not press **[POWER UP]** on the control pendant before the machine is fully installed.

Operation Safety:

DANGER: *To avoid injury verify that the spindle has stopped turning before opening the doors. In the event of a loss of power the spindle will take much longer to coast to a stop.*

- Do not operate the machine unless the doors are closed and the door interlocks are functioning correctly.
- Check for damaged parts and tools before you operate the machine. Any part or tool that is damaged should be properly repaired or replaced by authorized personnel. Do not operate the machine if any component does not appear to be functioning correctly.
- When a program runs, the tool turret can move rapidly at any time.
- Improperly clamped parts machined at high speeds/feeds may be ejected and puncture the enclosure. It is not safe to machine oversized or marginally clamped parts.

CAUTION: *Manual or Automatic closing of the enclosure doors is a potential pinch point. With Auto Door, the door may be programmed to close automatically, or by pressing the door open/close button on the operators pendant. Avoid putting hands or appendages in the door while closing either manually or automatically.*

Release of person trapped in the machine:

- No person should ever be located inside the machine during operation.
- In the unlikely event that a person is trapped inside the machine the emergency stop button should be immediately be depressed and the person removed.
- If the person is pinched or entangled the machine should be powered off; then the machine axes can be moved by use of a large external force in the direction required to free the person.

Recover from a jam or blockage:

- Of the chip conveyor - Follow the cleaning instructions on the Haas service site (go to www.haascnc.com click on the Service tab). If necessary, close the doors and reverse the conveyor so the jammed part or material is accessible, and remove. Use lifting equipment or get assistance for lifting heavy and awkward parts.
- Of a tool and material/part - Close the doors, press **[RESET]** to clear and displayed alarms. Jog the axis so the tool and material are clear.
- If the alarms do not reset or you are unable to clear a blockage, contact your Haas Factory Outlet (HFO) for assistance.

Follow these guidelines when you work with the machine:

- Normal operation - Keep the door closed and guards in place (for non-enclosed machines) while the machine operates.
- Part loading and unloading – An operator opens the door, completes the task, closes the door, and then presses **[CYCLE START]** (starting automatic motion).
- Machining job set-up – When set-up is complete, turn the set-up key to lock out set-mode and remove the key.
- Maintenance / Machine Cleaner– Press **[EMERGENCY STOP]** or **[POWER OFF]** on the machine before you enter the enclosure.
- Tool loading or unloading – A machinist enters the machining area to load or unload tools. Exit the area completely before automatic movement is commanded (for example, **[NEXT TOOL]**, **[TURRET FWD]**, **[TURRET REV]**).

Chuck safety:

DANGER: *Improperly clamped parts or oversized parts may be ejected with deadly force.*

- Do not exceed the chuck's rated speed. Higher speeds reduce chuck clamping force.
- Unsupported barstock must not extend outside the drawtube.
- Grease the chuck weekly. Follow the chuck manufacturer's instructions for regular service.
- Chuck jaws must not protrude beyond the diameter of the chuck.
- Do not machine parts larger than the chuck.
- Follow all of the chuck manufacturer's warnings regarding the chuck and workholding procedures.
- Hydraulic pressure must be set correctly to securely hold the work piece without distortion.
- Improperly clamped parts at high velocity may puncture the safety door. You must reduce the spindle speed to protect the operator when performing dangerous operations (e.g. turning oversized or marginally clamped parts).

Periodic inspection of machine safety features:

- Inspect door interlock mechanism for proper fit and function.
- Inspect safety windows and enclosure for damage or leaks.
- Verify all enclosure panels are in place.

Door Safety Interlock inspection:

- Inspect the door interlock, verify the door interlock key is not bent, misaligned, and that all fasteners are installed.
- Inspect the door interlock itself for any signs of obstruction or misalignment.

- Immediately replace an components of the Door Safety Interlock system that do not meet this criteria.

Door Safety Interlock verification:

- With the machine in run mode, close the machine door, run the spindle at 100 RPM, pull the door and verify the door does not open.

Machine Enclosure and Safety Glass inspection and testing:

Routine Inspection:

- Visually inspect the enclosure and safety glass for any signs of distortion, breakage or other damage.
- Replace the Lexan windows after 7 years or if they are damaged or severely scratched.
- Keep all safety glass and machine windows clean to allow proper viewing of the machine during operations.
- A daily visual inspection of the machine enclosure to verify all panels are in place should be performed.

Testing of machine enclosure:

- No testing of the machine enclosure is necessary.

1.1.3 Machine Environmental Limits

This table list the environmental limits for safe operation:

T1.1: Environmental Limits (Indoor Use Only)

	Minimum	Maximum
Operating Temperature	41 °F (5.0 °C)	122 °F (50.0 °C)
Storage Temperature	-4 °F (-20.0 °C)	158 °F (70.0 °C)
Ambient Humidity	20% relative, non-condensing	90% relative, non-condensing
Altitude	Sea Level	6,000 ft. (1,829 m)

CAUTION: *Do not operate the machine in explosive atmospheres (explosive vapors and/ or particulate matter).*

Machine with Haas Robot Package

Machine and robot environment is intended to be a machine shop or industrial installation. Shop lighting is the users responsibility.

1.1.4 Machine Noise Limits

CAUTION: *Take precautions to prevent hearing damage from machine/machining noise. Wear ear protection, change your application (tooling, spindle speed, axis speed, fixturing, programmed path) to reduce noise, or restrict access to machine area during cutting.*

Typical noise levels at the operator's position during normal operation are as follows:

- **A-Weighted** sound pressure level measurements will be 69.4dB or lower.
- **C-Weighted** instantaneous sound pressure levels will be 78.0dB or lower.
- **LwA** (sound power level A-weighted) will be 75.0dB or lower.

NOTE: *Actual noise levels while cutting material are greatly affected by the user's choice of material, cutting tools, speeds and feeds, workholding and other factors. These factors are application specific and are controlled by the user, not Haas Automation Inc.*

1.2 Unattended Operation

Fully enclosed Haas CNC machines are designed to operate unattended; however, your machining process may not be safe to operate unmonitored.

As it is the shop owner's responsibility to set up the machine safely and use best practice machining techniques, it is also the owner's responsibility to manage the progress of these methods. You must monitor your machining process to prevent damage, injury, or loss of life if a hazardous condition occurs.

For example, if there is the risk of fire due to the material machined, then you must install an appropriate fire suppression system to reduce the risk of harm to personnel, equipment, and the building. Contact a specialist to install monitoring tools before machines are allowed to run unattended.

It is especially important to select monitoring equipment that can immediately detect a problem and perform an appropriate action without human intervention.

1.3 Door Rules - Run / Setup Mode

All Haas CNC machines are equipped with locks on the operator doors and a key switch on the side of the control pendant to lock and unlock setup mode. Generally, setup mode status (locked or unlocked) affects how the machine operates when the doors are opened.

Setup mode should be locked out (the keyswitch in the vertical, locked position) at most times. In Run and in Setup mode, the enclosure doors are locked closed during CNC program execution, spindle rotation or axis movement. The doors automatically unlock when the machine is not in cycle. Many machine functions are unavailable with the door open.

When unlocked, setup mode allows a skilled machinist more access to the machine to set up jobs. In this mode, machine behavior is dependent on whether the doors are opened or closed. The following charts summarize the modes and allowed functions.

CAUTION: ***Haas Robot Package****: Care should be taken in Setup mode - Only time Robot can move while cage is open. For more information on the Haas Robot Package refer to the "Haas Robot Package" on page 12*

NOTE: *All these conditions follow assuming that the door is open and stays open before, during and the actions occur.*

T1.2: Lathe - Run/Setup Mode Restrictions

Machine Function	RUN Mode	SETUP Mode
Advance, Retract, Rapid Tailstock Motion	Not allowed.	Not allowed.
Air Blast On	Not allowed.	Not allowed.
Axis Jog using the Pendant Handle Jog	Not allowed.	Allowed.
Axis Jog using the RJH Handle Jog	Not allowed.	Allowed.
Axis Jog using the RJH shuttle knob	Not allowed.	Not allowed.
Axis Jog using E-Handwheel Jogging	Not allowed.	Allowed.
Axis Feed using E-Handwheel Rocker Switches	Not allowed.	Not allowed.
Axis Rapid using E-Handwheel Rocker Switches	Not allowed.	Not allowed.
Axis Rapid using Home G28 or Second Home	Not allowed.	Not allowed.
Axis Zero Return	Not allowed.	Not allowed.
Bar Feeder Set-up actions	Not allowed.	Not allowed.
Bar Pusher Set-up actions	Not allowed.	Not allowed.
Chip Conveyor **[CHIP FWD / REV]**	Not allowed.	Not allowed.
Chuck Clamp and Unclamp	Allowed	Allowed
[COOLANT] button on the pendant	Not allowed.	Allowed.

Machine Function	RUN Mode	SETUP Mode
[COOLANT] button on the RJH.	Not allowed.	Allowed.
C-Axis Disengaged	Allowed	Allowed
C-Axis Engaged	Not allowed.	Not allowed.
High Pressure Coolant (HPC) On	Not allowed.	Not allowed.
Jog the Spindle	Not allowed.	Not allowed.
Orient Spindle	Not allowed.	Not allowed.
Previous Tool (RJH)	Not allowed.	Not allowed.
Retract, Extend Parts Catcher	Not allowed.	Not allowed.
Retract, Extend Probe Arm	Not allowed.	Not allowed.
Run a program, **[CYCLE START]** button on the pendant	Not allowed.	Not allowed.
Run a program **[CYCLE START]** button on the RJH	Not allowed.	Not allowed.
Spindle **[FWD]** / **[REV]** button on the pendant.	Not allowed.	Not allowed.
Spindle **[FWD]** / **[REV]** on the RJH.	Not allowed.	Not allowed.
Tool Change **[ATC FWD]**] / **[ATC REV]**.	Not allowed.	Not allowed.

DANGER: *Do not attempt to override safety features. Doing so makes the machine unsafe and voids the warranty.*

1.3.1 Robot Cells

A machine in a robot cell is allowed to run a program while the door is open, regardless of the position of the Run-Setup key. While the door is open, the spindle speed is limited to the lower of the factory RPM limit or Setting 292, Door Open Spindle Speed Limit. If the door is opened while the spindle RPM is above the limit, the spindle will decelerate to the limit RPM. Closing the door removes the limit and the programmed RPM is restored.

This open-door condition is allowed only while a robot communicates with the CNC machine. Typically, an interface between the robot and the CNC machine addresses the safety of both machines.

1.4 Haas Robot Package

The Haas designed work cell made up of a CNC machine and a robot has been evaluated for CE compliance. Changes or variations to the Haas cell design should be re-evaluated for compliance to the applicable standards and are the responsibility of the user/integrator.

Robot is controlled by the CNC it is paired with. It does not respond to any external commands as it could cause hazardous conditions. Do not leave a network connection plugged into the robot controller. No remote control is permitted.

Run Mode

When in Run mode, unlocking the interlock and opening up the gate stops all motion, and no motion can be started until it is closed and locked.

Setup Mode

In Set up mode, speed limited motion such as jogging an axis of the robot can be performed in order to program a robot's path of motion, pick up position, set a robot's tool center point, (an offset), load and pick up parts from the spindle or part holder in the machine, etc. The robot program will also be able to be run slowly to prove out the programmed path of the robot.

NOTE: *The max robot speed in setup mode is 7.9 in/sec (200mm/sec).*

Robot Motion

Manual motion is only permitted in set up mode and is recommended only with limited speed of motion. High speed is permitted but 500mm clearance for the safety of the operator is required. This requires the set up and verification of DCS/keep out zone(s).

WARNING: *Startup of automatic motion with someone in the fenced in area is controlled by the operator. The hazardous area is visible from the remote jog pendant outside of the fenced in area surrounding the robot. Verify nobody is in the fenced in area before starting an automatic operation.*

Lighting

Level of task lighting required for the robot installation is to be provided by the end user. The robot does not require any lighting. But, light will be required for a user to load or unload parts or to perform maintenance, or service.

Installation

The Haas Robot Package installation procedure is located on the website. This procedure describes and verifies the functionality of the enabling device at install, i.e the buttons and how the remote jog handle is intended to be used. Scan the code below with your mobile device to go directly to the procedure.

F1.1: Haas Robot Package 1 - Lathe Installation

Haas Robot - FANUC Dual Check Safety (DCS)

Each Haas Robot is provided with FANUC's DCS System. This allows the user to define speed and positional limits to the robot. If the robot goes outside of these limits, DCS will stop the robot and remove power to the motors.

NOTE: *Verify proper setup of the DCS zones at the time of robot installation and every 6 months. It should also be verified after a new job has been set up. Scan the code below with your mobile device to go directly to the procedure.*

Operation

Recommendation of PPE including but not limited to gloves to protect from sharp edges and chips, eye glasses for eye protection, steel toed shoes etc. when handling parts or loading/unloading parts for the robot to handle.

WARNING: *Loss of air pressure may cause the gripper to allow a part being held to slip or be dropped. Users should review grippers that they purchase and determine how they will respond to a loss of power or air pressure, so they know how to minimize any potential hazard.*

The Haas Robot - Quick Start Guide is located on the website. This procedure helps the user set up a job with the Haas Robot. Scan the code below with your mobile device to go directly to the procedure.

1.5 Mist Extraction / Enclosure Evacuation

The Mills (except CM and GR models) have a provision installed that will allow for a mist extractor to be attached to the machine. It is entirely up to the owner/operator to determine if and what type of mist extractor is best suited for the application.The owner/operator assumes all responsibility for the installation of the mist extraction system

1.6 Spindle Safety Limit

Starting in software version 100.19.000.1100 a spindle safety limit has been added to the control.

F1.2: Spindle Safety Limit Popup [1]

This feature will display a warning message when the **[FWD]** or **[REV]** button is pressed and the previous commanded spindle speed is above the Spindle Maximum Manual Speed parameter. Press **[ENTER]** to go to the previous commanded spindle speed or press **[CANCEL]** to cancel the action.

T1.3: Spindle Maximum Manual Speed Parameter Values

Machine / Spindle Option	Spindle Maximum Manual Speed
Mills	5000
TL	1000
ST-10 through ST-20	2000
ST-30 through ST-35	1500
ST-40	750
Live Tool	2000

NOTE: *These values can not be changed.*

1.7 Modifications to the Machine

Haas Automation, Inc. is not responsible for damage caused by modifications you make to your Haas machine(s) with parts or kits not manufactured or sold by Haas Automation, Inc. The use of such parts or kits may void your warranty.

Some parts or kits manufactured or sold by Haas Automation, Inc. are considered user-installable. If you choose to install these parts or kits yourself, be sure to completely read the accompanying installation instructions. Make sure you understand the procedure, and how to do it safely, before you begin. If you have any doubts about your ability to complete the procedure, contact your Haas Factory Outlet (HFO) for assistance.

1.8 Improper Coolants

Coolant is an important part of many machining operations. When it is correctly used and maintained, coolant can improve part finish, lengthen tool life, and protect machine components from rust and other damage. Improper coolants, however, can cause significant damage to your machine.

Such damage can void your warranty, but it can also introduce hazardous conditions to your shop. For example, coolant leaks through damaged seals could create a slipping hazard.

Improper coolant use includes, but is not limited to, these points:

- Do not use plain water. This causes machine components to rust.
- Do not use flammable coolants.
- Do not use straight or “neat” mineral-oil products. These products cause damage to rubber seals and tubing throughout the machine. If you use a minimum-quantity lubrication system for near-dry machining, use only the recommended oils.

Machine coolant must be water-soluble, synthetic oil-based or synthetic-based coolant or lubricant.

NOTE: *Be sure to maintain your coolant mixture to keep the coolant concentrate at acceptable levels. Improperly maintained coolant mixtures can allow machine components to rust. Rust damage is not covered by your warranty.*

Ask your HFO or your coolant dealer if you have questions about the specific coolant that you plan to use.

1.9 Safety Decals

The Haas factory puts decals on your machine to quickly communicate possible hazards. If decals become damaged or worn, or if you need additional decals to emphasize a particular safety point, contact your Haas Factory Outlet (HFO).

NOTE: *Never alter or remove any safety decal or symbol.*

Be sure to familiarize yourself with the symbols on the safety decals. The symbols are designed to quickly tell you the type of information they give:

- Yellow Triangle - Describes a hazard.
- Red Circle with Slash-Through - Describes a prohibited action.

- Green Circle - Describes a recommended action.
- Black Circle - Gives information about machine or accessory operation.

F1.3: Example Safety Decal Symbols: [1] Hazard Description, [2] Prohibited Action, [3] Recommended Action.

1.9.1 Decal Symbols Reference

This section gives explanations and clarifications for the safety symbols you will see on your machine.

T1.4: Hazard Symbols – Yellow Triangles

Symbol	Description
	Moving parts can entangle, trap, crush, and cut. Keep all parts of your body away from machine parts when they move, or whenever motion is possible. Motion is possible when the power is on and the machine is not in **[EMERGENCY STOP]**. Secure loose clothing, hair, etc. Remember that automatically controlled devices can start at any time.
	Do not extend unsupported bar stock out the rear of the drawtube. Unsupported bar can bend and “whip”. A whipping bar can cause severe injury or death.

Symbol	Description
	The Regen is used by the spindle drive to dissipate excess power and will get hot. Always use care around the Regen.
	There are high voltage components on the machine that can cause electrical shock. Always use care around high voltage components.
	Machining operations can create hazardous chips, dust or mist. This is function of the materials being cut, the metalworking fluid and cutting tools used and the machining speeds/feeds. It is up to the owner/operator of the machine to determine if personal protective equipment such as safety goggles or a respirator is required and also if a mist extraction system is needed. All enclosed models have a provision for connecting a mist extraction system. Always read and understand the Safety Data Sheets (SDS) for the workpiece material, the cutting tools and the metalworking fluid.
	Always securely clamp workpieces in the chuck or collet. Properly fasten chuck jaws.
	Secure loose clothing, hair, jewelry, etc. Do not wear gloves around rotating machine components. You can be pulled into the machine, resulting in severe injury or death. Automatic motion is possible when the power is on and the machine is not in **[EMERGENCY STOP]**.

T1.5: Prohibited Action Symbols – Red Circles with Slash-Through

Symbol	Description
	Do not enter the machine enclosure when the machine is capable of automatic motion. When you must enter the enclosure to complete tasks, press **[EMERGENCY STOP]** or power off the machine. Put a safety tag on the control pendant to alert other people that you are inside the machine, and that they must not turn on or operate the machine.
	Do not machine ceramics.
	Do not use chuck jaw extensions. Do not extend chuck jaws beyond the chuck face.
	Keep your hands and body away from the area between the tailstock and workholding when automatic motion is possible.
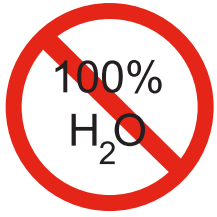	Do not use pure water as coolant. This will cause machine components to rust. Always use a rust-inhibitive coolant concentrate with water.

T1.6: Recommended Action Symbols – Green Circles

Symbol	Description
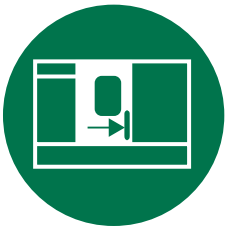	Keep the machine doors closed.
	Always wear safety glasses or goggles when you are near a machine. Airborne debris can cause eye damage. Always wear hearing protection when you are near a machine. Machine noise can exceed 70 dBA.
	Read and understand the operator's manual and other instructions included with your machine.
	Grease and maintain the chuck regularly. Follow the manufacturer's instructions.

T1.7: Informational Symbols – Black Circles

Symbol	Description
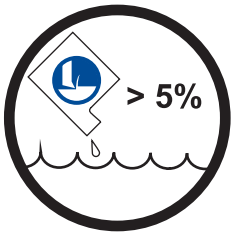	Maintain the recommended coolant concentration. A “lean” coolant mixture (less concentrated than recommended) may not effectively prevent machine components from rusting. A “rich” coolant mixture (more concentrated than recommended) wastes coolant concentrate without further benefit over the recommended concentration.

1.9.2 Other Safety Information

You may find other decals on your machine, depending on the model and options installed. Be sure to read and understand these decals.

1.9.3 More Information Online

For updated and supplemental information, including tips, tricks, maintenance procedures, and more, visit the Haas Service page at www.HaasCNC.com. You can also scan the code below with your mobile device to go directly to the Haas Service page:

Chapter 2: Introduction

2.1 Lathe Overview

These figures show some of the standard and optional features of your Haas lathe. Some of the features shown are highlighted in their appropriate sections. Note that these figures are representative only; your machine's appearance may vary depending on the model and installed options.

F2.1: Lathe Features (front view)

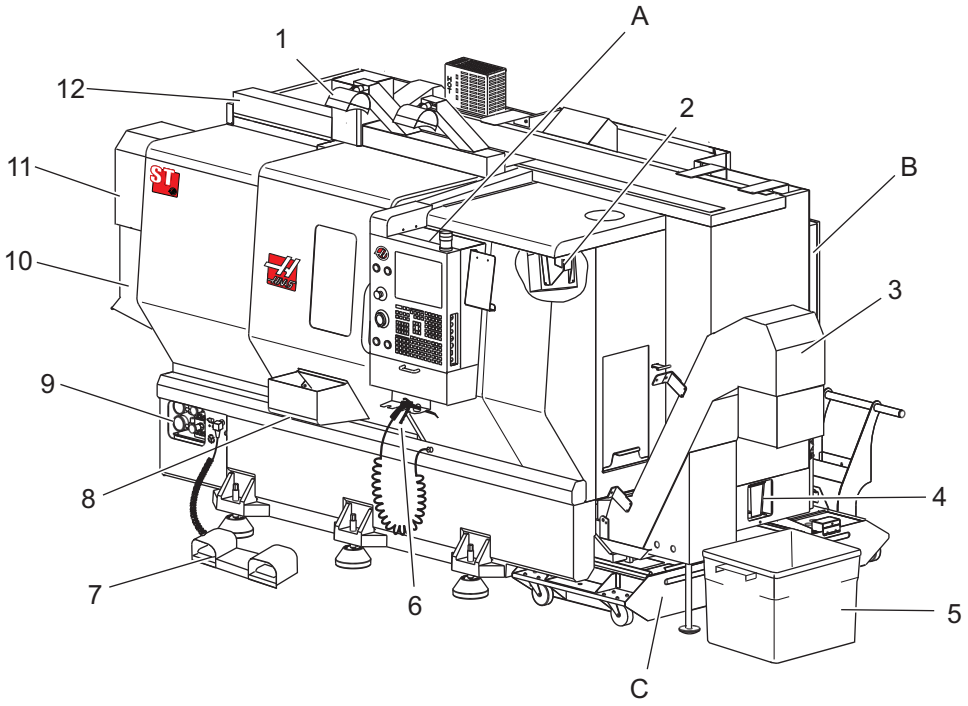

1. 2X High Intensity Lights (Optional)
2. Work Light (2X)
3. Chip Conveyor (Optional)
4. Oil Drain Container
5. Chip Container
6. Air Gun
7. Foot Pedal
8. Parts Catcher (Optional)
9. Hydraulic Power Unit (HPU)
10. Coolant Collector
11. Spindle Motor
12. Auto Door (Optional)

A. Control Pendant
B. Lubrication Panel Assembly
C. Coolant Tank

F2.2: Lathe Features (front view with covers removed)

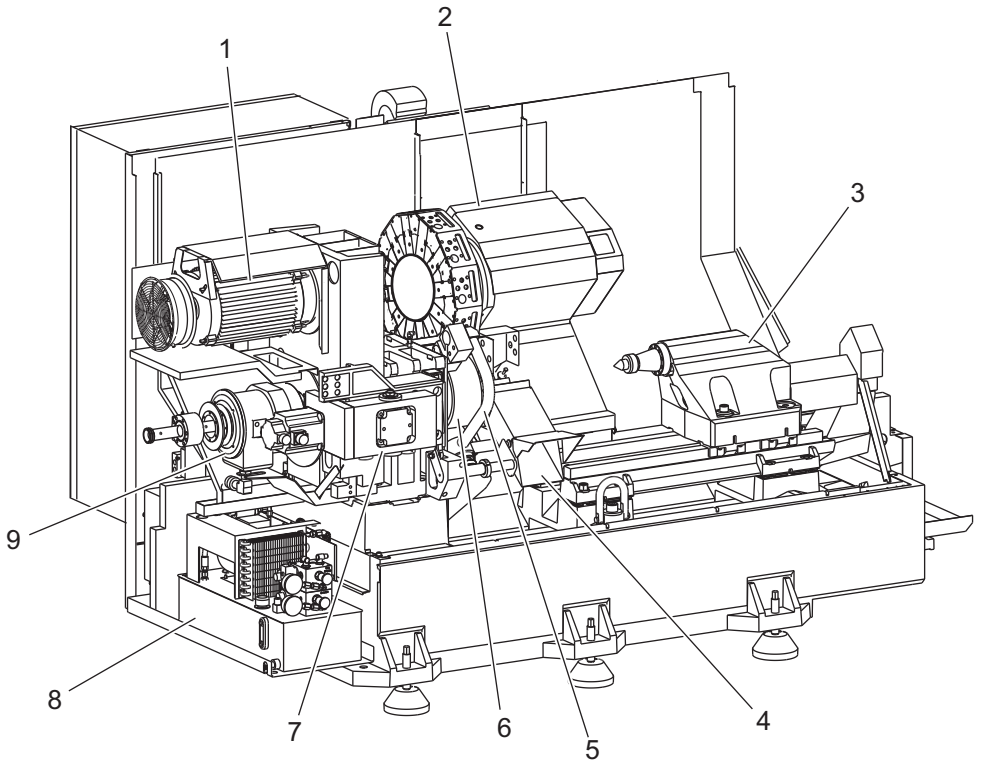

1. Spindle Motor
2. Tool Turret Assembly
3. Tailstock (Optional)
4. Parts Catcher (Optional)
5. LTP Arm (Optional)

6. Chuck
7. C-Axis Drive Assembly (Optional)
8. Hydraulic Power Unit (HPU)
9. Spindle Head Assembly

A Control Cabinet
B Control Cabinet Side Panel

F2.3: Lathe Features (front view) Detail A - Control Pendant with Cabinet

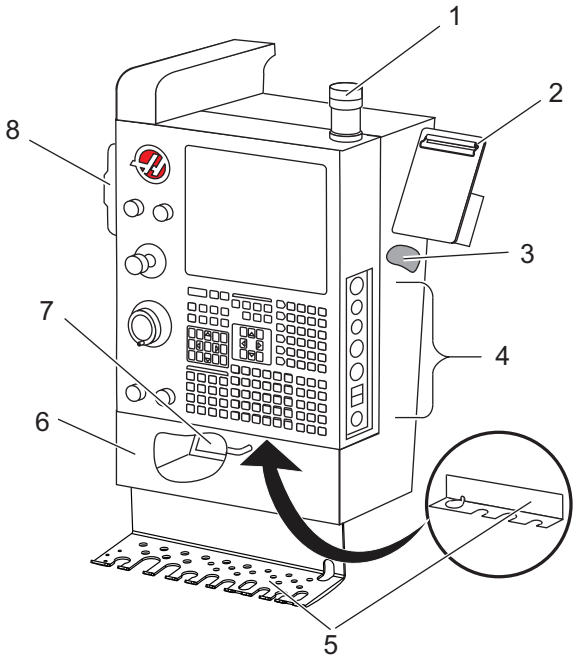

1. Work Beacon
2. Clipboard
3. Operator's Manual and Assembly Data (stored behind pendant)
4. Side panel Controls
5. Tool Holder (also shown, tool holder for thin pendant)
6. Storage Tray
7. G- and M-code Reference List
8. Remote Jog Handle

F2.4: Lathe Features Detail B - Lubrication Panel Example

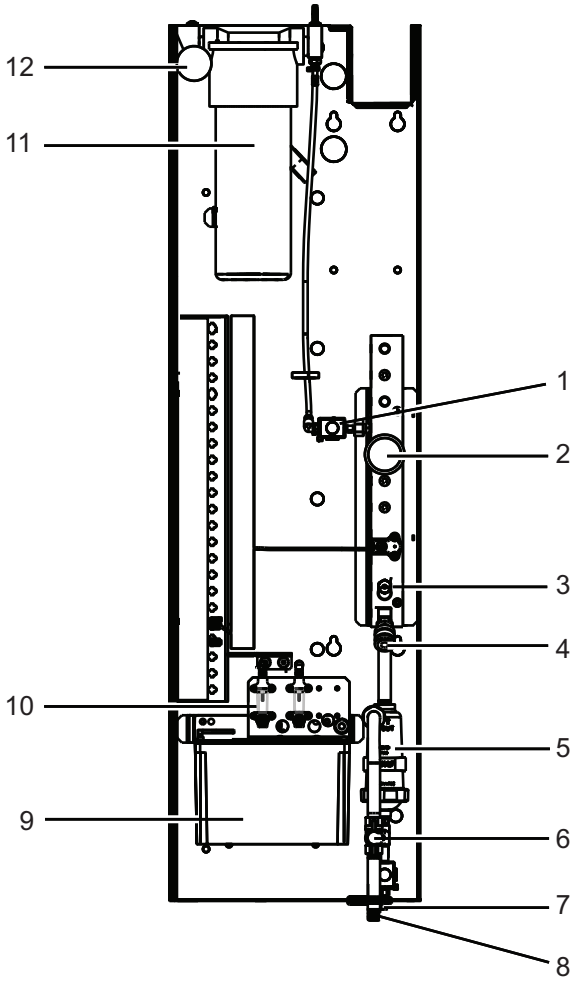

1. Min Lubrication Grease Solenoid
2. Air Pressure Gauge
3. Air Relief Valve
4. Rotary Table Air Supply
5. Air/Water Separator
6. Air Shut Off Valve
7. Purge Solenoid
8. Air Inlet Port
9. Spindle Lubrication Reservoir
10. Spindle Lubrication Sight Glass (2)
11. Axis Lubrication Grease Reservoir
12. Grease Pressure Gauge

NOTE: *More details are shown on the decals inside of the access door.*

F2.5: Lathe Features (3/4 side view) Detail C - Coolant Tank Assembly

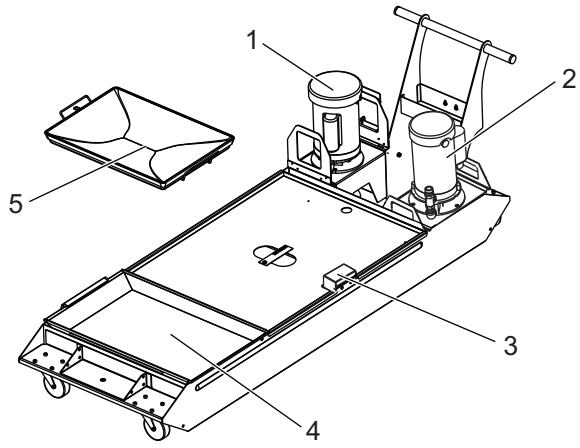

1. Standard Coolant Pump
2. High-Pressure Coolant Pump (Optional)
3. Coolant Level Sensor
4. Chip Strainer
5. Strainer Basket

F2.6: Toolroom Lathe (front view)

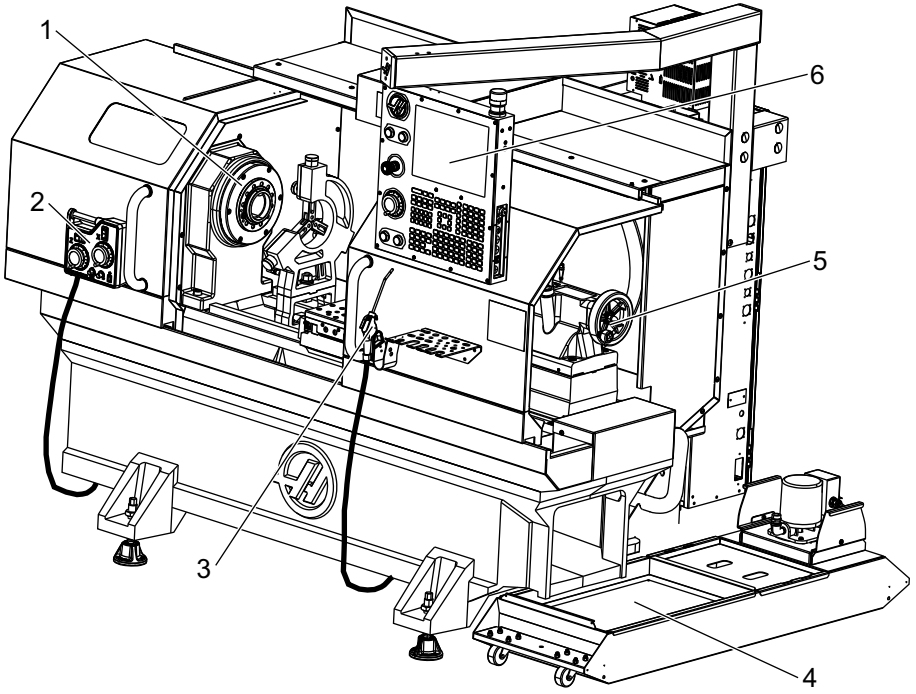

1. Spindle assembly
2. eHandwheel
3. Air Gun
4. Coolant Tank
5. Tailstock
6. Control Pendant

F2.7: Toolroom Lathe (front view, doors removed)

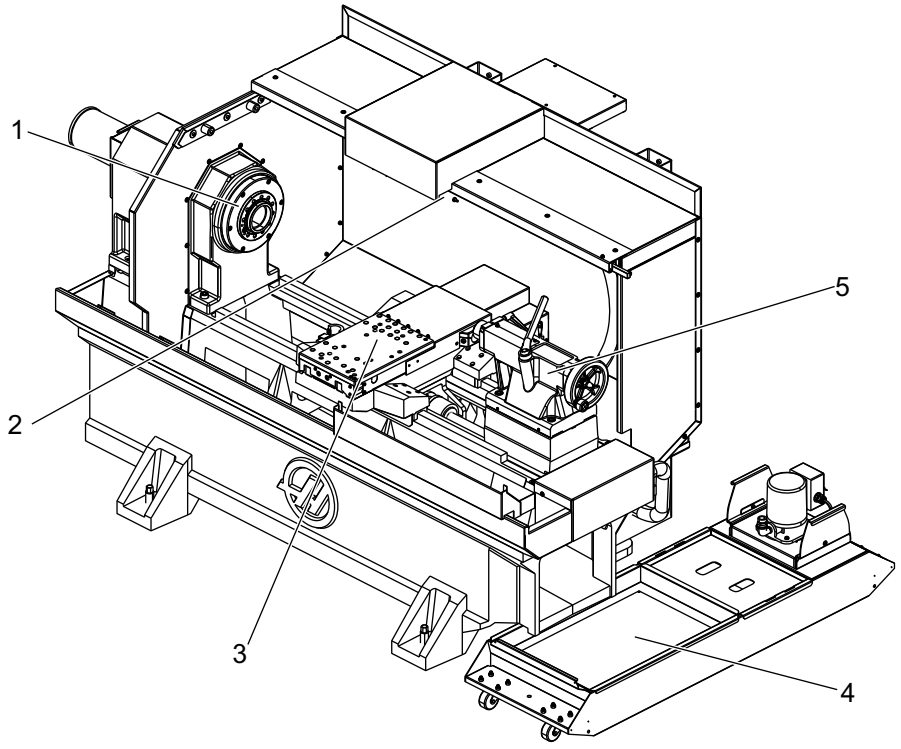

1. Spindle Nose
2. Worklight
3. Cross Slide (tool post / turret not shown)
4. Coolant Tank
5. Tailstock

2.2 Control Pendant

The control pendant is the main interface to your Haas machine. This is where you program and run your CNC machining projects. This control pendant orientation section describes the different pendant sections:

- Pendant front panel
- Pendant right side, top, and bottom
- Keyboard
- Control display

2.2.1 Pendant Front Panel

T2.1: Front Panel Controls

Name	Image	Function
[POWER ON]		Powers the machine on.
[POWER OFF]		Powers the machine off.
[EMERGENCY STOP]		Press to stop all axis motion, disable servos, stop the spindle and tool changer, and turn off the coolant pump.
[HANDLE JOG]		This is used to jog axes (select in **[HANDLE JOG]** Mode). Also used to scroll through program code or menu items while editing.
[CYCLE START]		Starts a program. This button is also used to start a program simulation in graphics mode.
[FEED HOLD]		Stops all axis motion during a program. The spindle continues to run. Press **[CYCLE START]** to cancel.

2.2.2 Pendant Right Side, and Top Panels

The following tables describe the right side, top, and bottom of the pendant.

T2.2: Right Side Panel Controls

Name	Image	Function
USB		Plug compatible USB devices into this port. It has a removable dust cap.
Memory Lock		In the locked position, this keyswitch prevents alterations to programs, settings, parameters, and offsets.
Setup Mode		In the locked position, this keyswitch enables all machine safety features. Unlock allows setup (refer to “Setup Mode” in the Safety section of this manual for details).
Second Home		Press to rapid all axes to the coordinates specified in settings 268 - 270. (Refer to “Settings 268 - 270” in the Settings section of this manual for details).
Auto Door Override		Press this button to open or close the Auto Door (if equipped).
Worklight		These buttons toggle the internal worklight and High Intensity Lighting (if equipped).

T2.3: Pendant Top Panel

Beacon Light	
Provides quick visual confirmation of the machine’s current status. There are five different beacon states:	
Light Status	**Meaning**
Off	The machine is idle.
Solid Green	The machine is running.

Beacon Light	
Flashing Green	The machine is stopped, but is in a ready state. Operator input is required to continue.
Flashing Red	A fault has occurred, or the machine is in Emergency Stop.
Flashing Yellow	A tool has expired, and the Tool Wear warning icon is shown.

2.2.3 Keyboard

Keyboard keys are grouped into these functional areas:

1. Function
2. Cursor
3. Display
4. Mode
5. Numeric
6. Alpha
7. Jog
8. Overrides

F2.8: Lathe Keyboard: Function Keys [1], Cursor Keys [2], Display Keys [3], Mode Keys [4], Numeric Keys [5], Alpha Keys [6], Jog Keys [7], Override Keys [8]

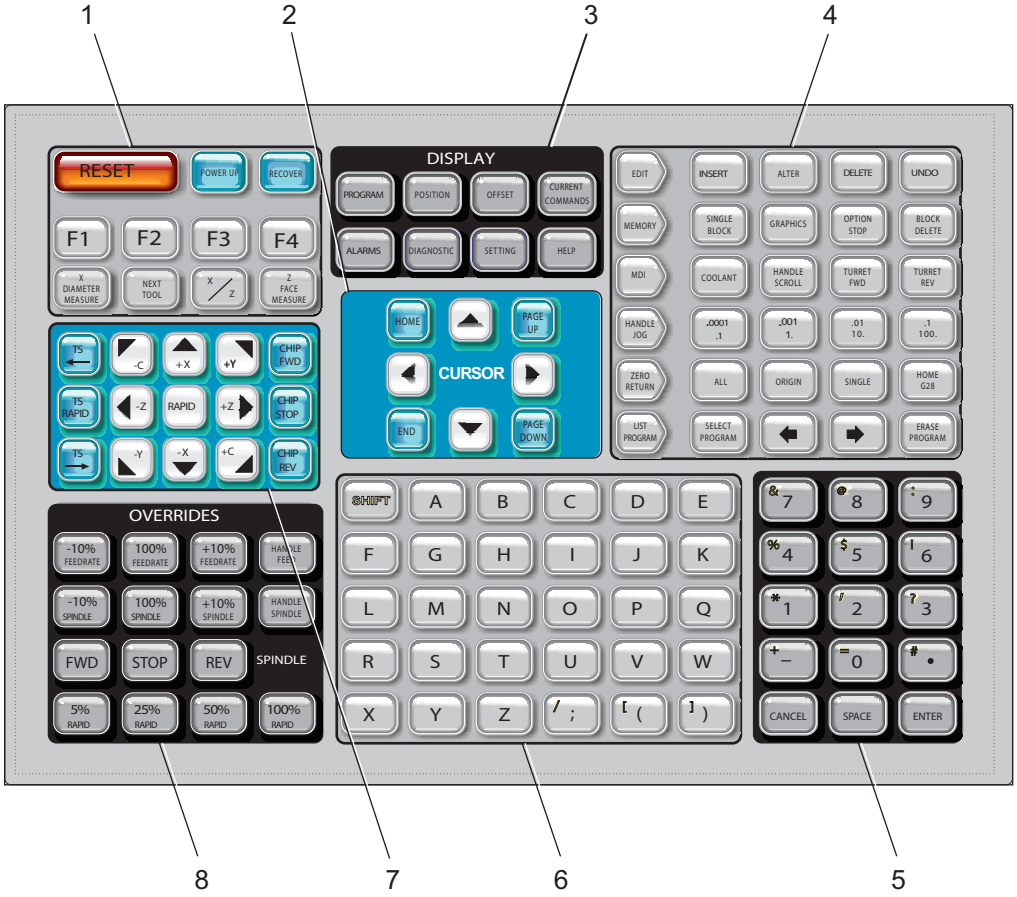

Function Keys

Name	Key	Function
Reset	**[RESET]**	Clears alarms. Sets overrides to default values.
Power up	**[POWER UP]**	**`Zero All Axes`** screen displays. Select the axis zero return order.

Name	Key	Function
Recover	**[RECOVER]**	The **`Tap Recovery`** screen displays. This button is functional to recover from a tap.
F1- F4	**[F1 - F4]**	These buttons have different functions depending on tab that is active.
X Diameter Measure	**[X DIAMETER MEASURE]**	Records X-Axis tool shift offsets on the offset page during part setup.
Next Tool	**[NEXT TOOL]**	Selects the next tool from the turret (usually used during part setup).
X/Z	**[X/Z]**	Toggles between X-axis and Z-Axis jog modes during part setup.
Z Face Measure	**[Z FACE MEASURE]**	Used to record Z-Axis tool shift offsets on the offset page during part setup.

Cursor Keys

The cursor keys let you move between data fields, scroll through programs, and navigate through tabbed menus.

T2.4: Cursor Key List

Name	Key	Function
Home	**[HOME]**	Moves the cursor to the top-most item on the screen; in editing, this is the top left block of the program.
Cursor Arrows	**[UP]**, **[DOWN]**, **[LEFT]**, **[RIGHT]**	Moves one item, block, or field in the associated direction. The keys depict arrows, but this manual refers to these keys by their spelled-out names.
Page Up, Page Down	**[PAGE UP]** / **[PAGE DOWN]**	Used to change displays or move up/down one page when viewing a program.
End	**[END]**	Moves the cursor to the bottom-most item on the screen. In editing, this is the last block of the program.

Display Keys

You use the Display keys to see the machine displays, operational information, and help pages.

T2.5: List of Display Keys and How They Operate

Name	Key	Function
Program	**[PROGRAM]**	Selects the active program pane in most modes.
Position	**[POSITION]**	Selects the positions display.
Offsets	**[OFFSET]**	Displays the Tool Offset and Work Offset tabbed menu.
Current Commands	**[CURRENT COMMANDS]**	Displays menus for Devices, Timers, Macros, Active Codes, Calculators, Advanced Tool Management (ATM), Tool Table, and Media.
Alarms	**[ALARMS]**	Displays the Alarm viewer and Message screens.
Diagnostics	**[DIAGNOSTIC]**	Displays tabs for Features, Compensation, Diagnostics, and Maintenance.
Settings	**[SETTING]**	Displays and allows changing of user settings.
Help	**[HELP]**	Displays help information.

Mode Keys

Mode keys change the operational state of the machine. Each mode key is arrow shaped and points to the row of keys that perform functions related to that mode key. The current mode is always displayed in the top left of the screen, in *Mode:Key* display form.

NOTE: ***[EDIT]*** *and* ***[LIST PROGRAM]*** *can also act as display keys, where you can access program editors and the device manager without changing the machine mode. For example, while the machine runs a program, you can use the device manager (****[LIST PROGRAM]****) or background editor (****[EDIT]****) without stopping the program.*

T2.6: List of **[EDIT]** Mode Keys and How They Operate

Name	Key	Function
Edit	**[EDIT]**	Lets you edit programs in the editor. You can access the Visual Programming System (VPS) and Shape Creator from the EDIT tabbed menu.
Insert	**[INSERT]**	Enters text from the input line or the clipboard into the program at the cursor position.
Alter	**[ALTER]**	Replaces the highlighted command or text with text from the input line or the clipboard. ***NOTE:*** **[ALTER]** *does not work for offsets.*
Delete	**[DELETE]**	Deletes the item that the cursor is on, or deletes a selected program block.
Undo	**[UNDO]**	Undoes up to the last 40 edit changes, and deselects a highlighted block. ***NOTE:*** **[UNDO]** *does not work for deleted highlighted blocks or to recover a deleted program.*

T2.7: List of **[MEMORY]** Mode Keys and How They Operate

Name	Key	Function
Memory	**[MEMORY]**	Selects memory mode. You run programs in this mode, and the other keys in the MEM row control the ways in which the program is run. Shows *OPERATION:MEM* in upper left display.
Single Block	**[SINGLE BLOCK]**	Toggles single block on or off. When single block is on, the control runs only one program block each time you press **[CYCLE START]**.
Graphics	**[GRAPHICS]**	Opens Graphics mode.

Name	Key	Function
Optional Stop	**[OPTION STOP]**	Toggles optional stop on or off. When optional stop is on, the machine stops when it reaches M01 commands.
Block Delete	**[BLOCK DELETE]**	Toggles Block Delete On or Off. When Block Delete is On, the control ignores (does not execute) the code following a Forward Slash (/), on that same line.

T2.8: List of **[MDI]** Mode Keys and How They Operate

Name	Key	Function
Manual Data Input	**[MDI]**	In MDI mode, you run unsaved programs or blocks of code entered from the control. Shows *EDIT:MDI* in upper left display.
Coolant	**[COOLANT]**	Turns the optional coolant on and off. Press **[SHIFT]** and then **[COOLANT]** to turn on the optional High-Pressure Coolant (HPC). Because HPC and regular coolant share a common orifice, you cannot activate both at the same time.
Handle Scroll	**[HANDLE SCROLL]**	Toggles Handle Scroll mode. This lets you use the jog handle to move the cursor in menus while the control is in jog mode.
Turret Forward	**[TURRET FWD]**	Rotates the tool turret forward to the next sequential tool. If Tnn is entered on the input line, the turret will advance in the forward direction to tool nn.
Turret Reverse	**[TURRET REV]**	Rotates the tool turret backward to the previous tool. If Tnn is entered on the input line, the turret will advance in the reverse direction to tool nn.

T2.9: List of **[HANDLE JOG]** Mode Keys and How They Operate

Name	Key	Function
Handle Jog	**[HANDLE JOG]**	Enters Jog mode.
.0001/.1 .001/1 .01/10 .1/100	**[.0001 /.1]**, **[.001 / 1]**, **[.01 / 10]**, **[.1 / 100]**	Selects the increment for each click of the jog handle. When the lathe is in MM mode the first number is multiplied by ten when jogging the axis (e.g., .0001 becomes 0.001 mm). The bottom number sets speed after you press and hold an axis jog key. Shows *SETUP:JOG* in upper left display.

T2.10: List of **[ZERO RETURN]** Mode Keys and How They Operate

Name	Key	Function
Zero Return	**[ZERO RETURN]**	Selects Zero Return mode, which displays axis location in four different categories: Operator, Work G54, Machine, and Dist (distance) To Go. Select the tab to switch between the categories. Shows *SETUP:ZERO* in the upper-left display.
All	**[ALL]**	Returns all axes to machine zero. This is similar to **[POWER UP]**, except a tool change does not occur.
Origin	**[ORIGIN]**	Sets selected values to zero.
Single	**[SINGLE]**	Returns one axis to machine zero. Press the desired axis letter on the Alpha keyboard and then press **[SINGLE]**.
Home G28	**[HOME G28]**	Returns all axes to zero in rapid motion. **[HOME G28]** will also home a single axis in the same manner as **[SINGLE]**. ***CAUTION:*** *Make sure the axis motion paths are clear when you press this key. There is no warning or prompt before axis motion begins.*

T2.11: List of **[LIST PROGRAM]** Mode Keys and How They Operate

Name	Key	Function
List Programs	**[LIST PROGRAM]**	Accesses a tabbed menu to load and save programs.
Select Programs	**[SELECT PROGRAM]**	Makes the highlighted program the active program.
Back	**[BACK ARROW]**,	Navigates to the screen you were on before the current one. This key operates like the BACK button on a web browser.

Name	Key	Function
Forward	**[FORWARD ARROW]**,	Navigates to the screen you went to after the current screen, if you have used the back arrow. This key operates like the FORWARD button on a web browser.
Erase Program	**[ERASE PROGRAM]**	Deletes the selected program in List Program mode. Deletes the entire program in MDI mode.

Numeric Keys

Use the numeric keys to type numbers, along with some special characters (printed in yellow on the main key). Press **[SHIFT]** to enter the special characters.

T2.12: List of Numeric Keys and How They Operate

Name	Key	Function
Numbers	**[0]-[9]**	Types numbers.
Minus sign	**[-]**	Adds a minus (-) sign to the input line.
Decimal point	**[.]**	Adds a decimal point to the input line.
Cancel	**[CANCEL]**	Deletes the last character typed.
Space	**[SPACE]**	Adds a space to input.
Enter	**[ENTER]**	Answers prompts and writes input.
Special Characters	Press **[SHIFT]**, then a numeric key	Inserts the yellow character on the upper-left of the key. These characters are used for comments, macros, and certain special features.
+	**[SHIFT]**, then **[-]**	Inserts +
=	**[SHIFT]**, then **[0]**	Inserts =
#	**[SHIFT]**, then **[.]**	Inserts #
*	**[SHIFT]**, then **[1]**	Inserts *
‘	**[SHIFT]**, then **[2]**	Inserts ‘

Name	Key	Function
?	**[SHIFT]**, then **[3]**	Inserts ?
%	**[SHIFT]**, then **[4]**	Inserts %
$	**[SHIFT]**, then **[5]**	Inserts $
!	**[SHIFT]**, then **[6]**	Inserts !
&	**[SHIFT]**, then **[7]**	Inserts &
@	**[SHIFT]**, then **[8]**	Inserts @
:	**[SHIFT]**, then **[9]**	Inserts :

Alpha Keys

Use the alpha keys to type the letters of the alphabet, along with some special characters (printed in yellow on the main key). Press **[SHIFT]** to enter the special characters.

T2.13: List of Alpha Keys and How They Operate

Name	Key	Function
Alphabet	**[A]**-**[Z]**	Uppercase letters are the default. Press **[SHIFT]** and a letter key for lowercase.
End-of-block (EOB)	**[;]**	This is the end-of-block character, which signifies the end of a program line.
Parentheses	**[(]**, **[)]**	Separate CNC program commands from user comments. They must always be entered as a pair.
Shift	**[SHIFT]**	Accesses additional characters on the keyboard, or shifts to lower case alpha characters. The additional characters are seen in the upper left of some of the alpha and number keys.
Special Characters	Press **[SHIFT]**, then an alpha key	Inserts the yellow character on the upper-left of the key. These characters are used for comments, macros, and certain special features.
Forward Slash	**[SHIFT]**, then **[;]**	Inserts /

Name	Key	Function
Left Bracket	**[SHIFT]**, then **[(]**	Inserts [
Right Bracket	**[SHIFT]**, then **[)]**	Inserts]

Jog Keys

Name	Key	Function
Tailstock towards spindle	**[TS <—]**	Press and hold this key to move the tailstock towards the spindle.
Tailstock rapid	**[TS RAPID]**	Increases the speed of the tailstock when pressed simultaneously with one of the other tailstock keys.
Tailstock away from spindle	**[TS —>]**	Press and hold this key to move the tailstock away from the spindle.
Axis keys	**[+X/-X, +Z/-Z, +Y/-Y, +C/-C]**	Press and hold an individual key or press the desired axes and use the jog handle.
Rapid	**[RAPID]**	Press and hold this key simultaneously with one of the above keys (X+, X-, Z+, Z-) to move that axis in the selected direction at maximum jog speed.
Chip Conveyor Forward	**[CHIP FWD]**	Starts optional chip conveyor in the "Forward" direction, moving chips out of the machine.
Chip Conveyor Stop	**[CHIP STOP]**	Stops the chip conveyor.
Chip Conveyor Reverse	**[CHIP REV]**	Starts the optional chip conveyor in the "Reverse" direction, which is useful in clearing jams and debris.

Override Keys

T2.14: List of Override Keys and How They Operate

Name	Key	Function
-10% Feedrate	**[-10% FEEDRATE]**	Decreases the current feedrate by 10%.
100% Feedrate	**[100% FEEDRATE]**	Sets an overridden feedrate back to the programmed feed rate.
+10% Feedrate	**[+10% FEEDRATE]**	Increases the current feedrate by 10%.
Handle Control Feed Rate	**[HANDLE FEED]**	Lets you use the jog handle to adjust the feedrate in 1% increments.
-10% Spindle	**[-10% SPINDLE]**	Decreases the current spindle speed by 10%.
100% Spindle	**[100% SPINDLE]**	Sets the overridden spindle speed back to the programmed speed.
+10% Spindle	**[+10% SPINDLE]**	Increases the current spindle speed by 10%.
Handle Spindle	**[HANDLE SPINDLE]**	Lets you use the jog handle to adjust the spindle speed in 1% increments.
Forward	**[FWD]**	Starts the spindle in the clockwise direction.
Stop	**[STOP]**	Stops the spindle.
Reverse	**[REV]**	Starts the spindle in the counterclockwise direction.
Rapids	**[5% RAPID]**/ **[25% RAPID]**/ **[50% RAPID]** / **[100% RAPID]**	Limits machine rapids to the value on the key.

Override Usage

Overrides let you temporarily adjust the speeds and feeds in your program. For example, you can slow down rapids while you prove out a program, or adjust the feedrate to experiment with its effect on part finish, etc.

You can use Settings 19, 20, and 21 to disable the feedrate, spindle, and rapid overrides, respectively.

[FEED HOLD] acts as an override that stops rapid and feed moves when you press it. **[FEED HOLD]** also stops tool changes and part timers, but not tapping cycles or dwell timers.

Press **[CYCLE START]** to continue after a **[FEED HOLD]**. When the Setup Mode key is unlocked, the door switch on the enclosure also has a similar result but displays *Door Hold* when the door is opened. When the door is closed, the control is in Feed Hold and **[CYCLE START]** must be pressed to continue. Door Hold and **[FEED HOLD]** do not stop any auxiliary axes.

You can override the standard coolant setting by pressing **[COOLANT]**. The coolant pump remains either on or off until the next M-code or operator action (see Setting 32).

Use Settings 83, 87, and 88 to have M30 and M06 commands, or **[RESET]**, respectively, change overridden values back to their defaults.

2.2.4 Control Display

The control display is organized into panes that change with the different machine and display modes.

F2.9: Basic Control Display Layout in **`Operation:Mem`** Mode (While a Program Runs)

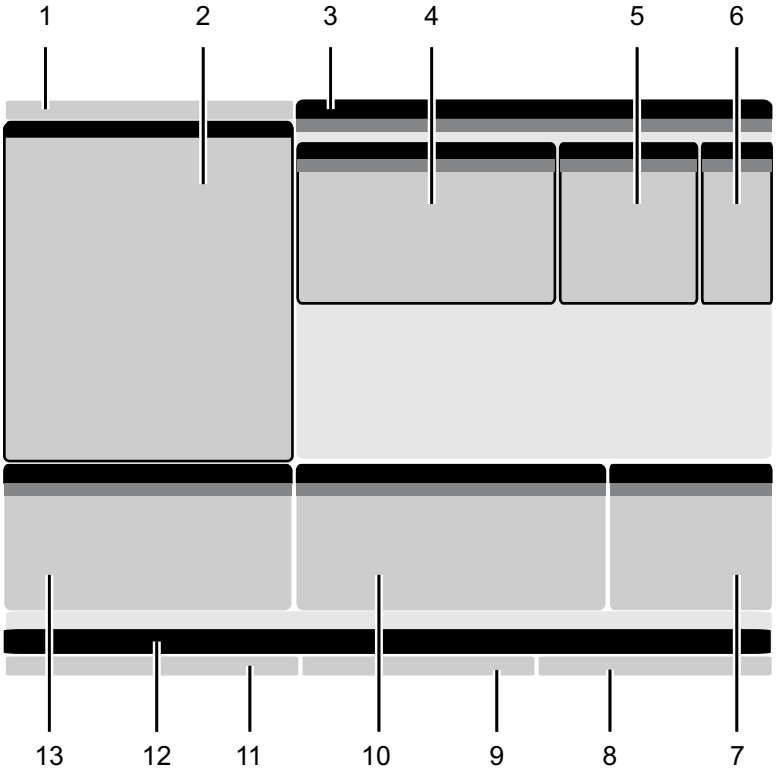

1. Mode, Network, and Time Status Bar
2. Program Display
3. Main Display (size varies)/Program/Offsets/Current Commands/Settings/Graphics/Editor/VPS/Help
4. Active Codes
5. Active Tool
6. Coolant
7. Timers, Counters / Tool Management
8. Alarm Status
9. System Status Bar
10. Position Display / Axis Load
11. Input Bar
12. Icon Bar
13. Spindle Status

The active pane has a white background. You can work with data in a pane only when that pane is active, and only one pane is active at a time. For example, when you select the **`Tool Offsets`** tab, the offsets table background turns white. You can then make changes to the data. In most cases, you change the active pane with the display keys.

Mode and Active Display Bar

The Haas control organizes machine functions into three modes: Setup, Edit, and Operation. Each mode shows on one screen all of the information you need to do tasks under that mode. For example, in Setup mode, you have access to both the work offset table, the tool offset table, and position information. Edit mode gives you access to the program editor and optional systems like Visual Programming (VPS) (which contains Wireless Intuitive Probing (WIPS)). Operation mode includes Memory (MEM), the mode in which you run programs.

F2.10: The Mode and Display bar shows [1] the current mode, [2] the network connectivity status, and [3] the time.

T2.15: Mode, Key Access, and Mode Display

Mode	Keys	Display [1]	Function
Setup	**[ZERO RETURN]**	**SETUP: ZERO**	Provides all control features for machine setup.
	[HANDLE JOG]	**SETUP: JOG**	
Edit	**[EDIT]**	**ANY**	Provides all program editing, management, and transfer functions.
	[MDI]	**EDIT: MDI**	
	[LIST PROGRAM]	**ANY**	
Operation	**[MEMORY]**	**OPERATION: MEM**	Provides all control features necessary to run a program.
	[EDIT]	**OPERATION: MEM**	Provides background editing of active programs.
	[LIST PROGRAM]	**ANY**	Provides background editing of programs.

Offsets Display

To access the offset tables, press **[OFFSET]** and select the **TOOL** tab or the **WORK** tab.

T2.16: Offset Tables

Name	Function
TOOL	Display and work with tool numbers and tool length geometry.
WORK	Display and work with part zero locations.

Current Commands

This section describes the Current Commands pages and the types of data they show. The information from most of these pages also appears in other modes.

Press **[CURRENT COMMANDS]** to access the tabbed menu of available Current Commands displays.

Devices -The **Mechanisms** tab on this page shows hardware devices on the machine that you can command manually. For example, you can manually extend and retract the Parts Catcher or Probe Arm. You can also manually rotate the spindle clockwise or counterclockwise at a desired RPM.

Timers Display -This page shows:

- The current date and time.
- The total power on time.
- Total cycle start time.
- Total feed time.
- M30 counters. Each time the a program reaches an **M30** command, both of these counters increment by one.
- Macro variable displays.

You also see these timers and counters in the lower-right section of the display in the **OPERATION:MEM**, **SETUP:ZERO**, and **EDIT:MDI** modes.

Macros Display -This page shows a list of the macro variables and their values. The control updates these variables as programs run. You can modify the variables in this display; refer to the Variable Display Page on page **239**.

Active Codes -This page lists the active program codes. A smaller version of this display is included on the **OPERATION:MEM** and **EDIT:MDI** mode screens. Also when you press **[PROGRAM]** in any Operation mode, you see the active program codes.

Advanced Tool Management -This page contains information the control uses to predict tool life. Here is where you create and manage tool groups, and where you enter the maximum tool load percentage expected for each tool.

For more information, refer to the Advanced Tool Management section in the Operation chapter of this manual.

Calculator -This page contains the Standard, Milling/Turning, and Tapping calculators.

Media -This page contains the **`Media Player`**.

Devices / Mechanisms

The **`Mechanisms`** page displays possible machine components and options on your machine. Select the listed mechanism using the **[UP]** and **[DOWN]** arrows for more information on its operation and use. Pages give detailed instructions on the functions of the machine components, quick tips, as well as links to other pages to help you learn about and utilize your machine.

- Select the Devices tab in the **[CURRENT COMMANDS]** menu.
- Select the Mechanisms that you want to use.

Main Spindle

F2.11: Main Spindle Device Display

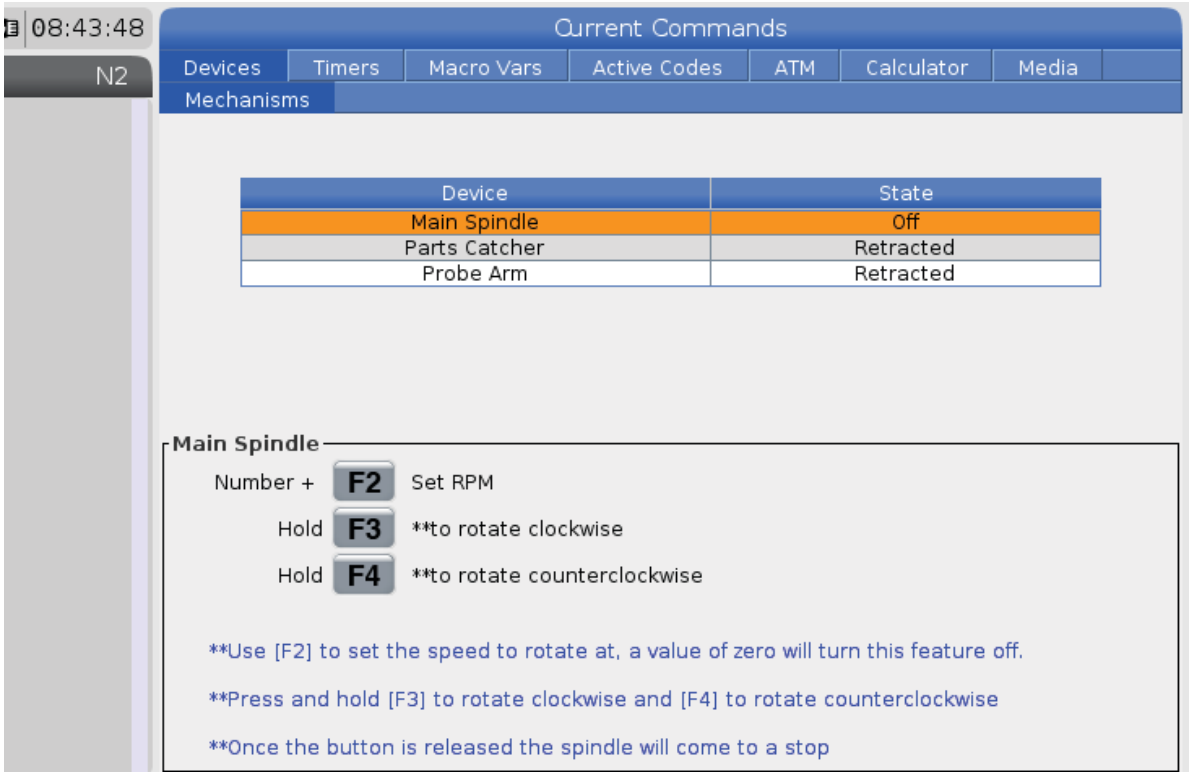

The **Main Spindle** option in **Devices** allows you to rotate the spindle clockwise or counterclockwise at a chosen RPM. The maximum RPM is limited by the machine's maximum RPM settings.

- Use the cursor arrow keys to move from field to field.
- Enter the RPM you want to rotate the spindle and press **[F2]**.
- Hold down **[F3]** to rotate the spindle clockwise. Hold down **[F4]** to rotate the spindle counterclockwise. The spindle comes to a stop when the button is released.

Parts Catcher

F2.12: Parts Catcher Device Display

The **Parts Catcher** option in **Devices** allows you to **Extend** and **Retract** the parts catcher. The door must be fully closed.

- Use the cursor arrow keys to move from field to field.
- Press **[F2]** to extend the parts catcher and press **[F2]** to retract the parts catcher.
- Press **[F3]** to partially extend the parts catcher to the part-off position.
- To setup the dual action parts catcher refer to: See "Dual Action - Parts Catcher - Setup" on page 147.

Probe Arm

F2.13: Probe Arm Device Display

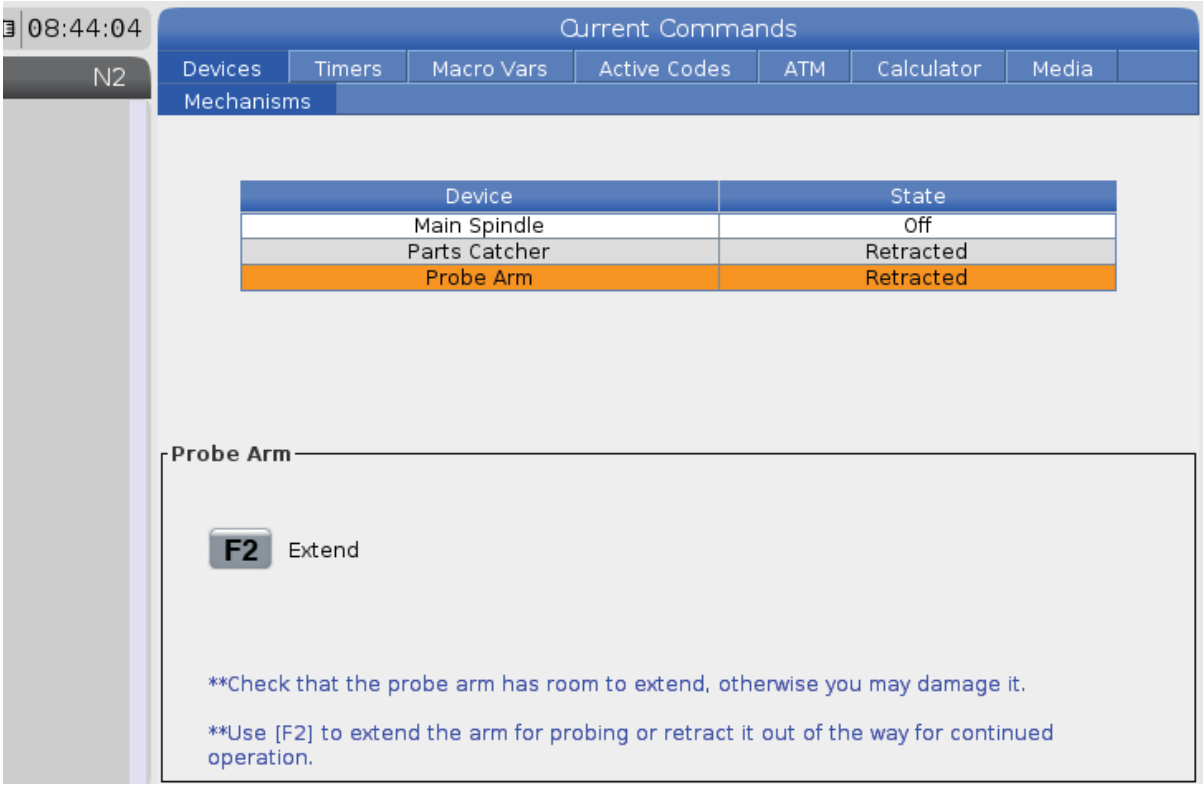

The **`Probe Arm`** option in **`Devices`** allows you to **`Extend`** and **`Retract`** the probe arm. The door must be fully opened or fully closed.

- Use the cursor arrow keys to move from field to field.
- Press **[F2]** to extend the probe arm and press **[F2]** to retract the probe arm.

Bar Feeder

F2.14: Bar Feeder Setup Display

The **`Bar Feeder`** tab on **`Devices`** allows you to set up the Bar feeder system variables.

- Use the cursor arrow keys to move from field to field.

Time Adjustment

Follow this procedure to adjust the date or time.

1. Select the **`Timers`** page in Current Commands.
2. Use the cursor arrow keys to highlight the **`Date:`**, **`Time:`**, or **`Time Zone`** field.
3. Press **[EMERGENCY STOP]**.
4. In the **`Date:`** field, type the new date in the format `MM-DD-YYYY`, including the hyphens.
5. In the **`Time:`** field, type the new time in the format `HH:MM`, including the colon. Press **[SHIFT]** and then **[9]** to type the colon.

6. In the **Time Zone:** field, press ENTER to select from the list of time zones. You can type search terms in the pop-up window to narrow the list. For example, type PST to find Pacific Standard Time. Highlight the time zone you want to use.
7. Press **[ENTER]**.

Timer and Counter Reset

You can reset the power-on, cycle-start, and feed cutting timers. You can also reset the M30 counters.

1. Select the **Timers** page in Current Commands.
2. Use the cursor arrow keys to highlight the name of the timer or counter that you want to reset.
3. Press **[ORIGIN]** to reset the timer or counter.

TIP: *You can reset the M30 counters independently to track finished parts in two different ways; for example, parts finished in a shift and total parts finished.*

Current Commands - Active Codes

F2.15: Active Codes Display Example

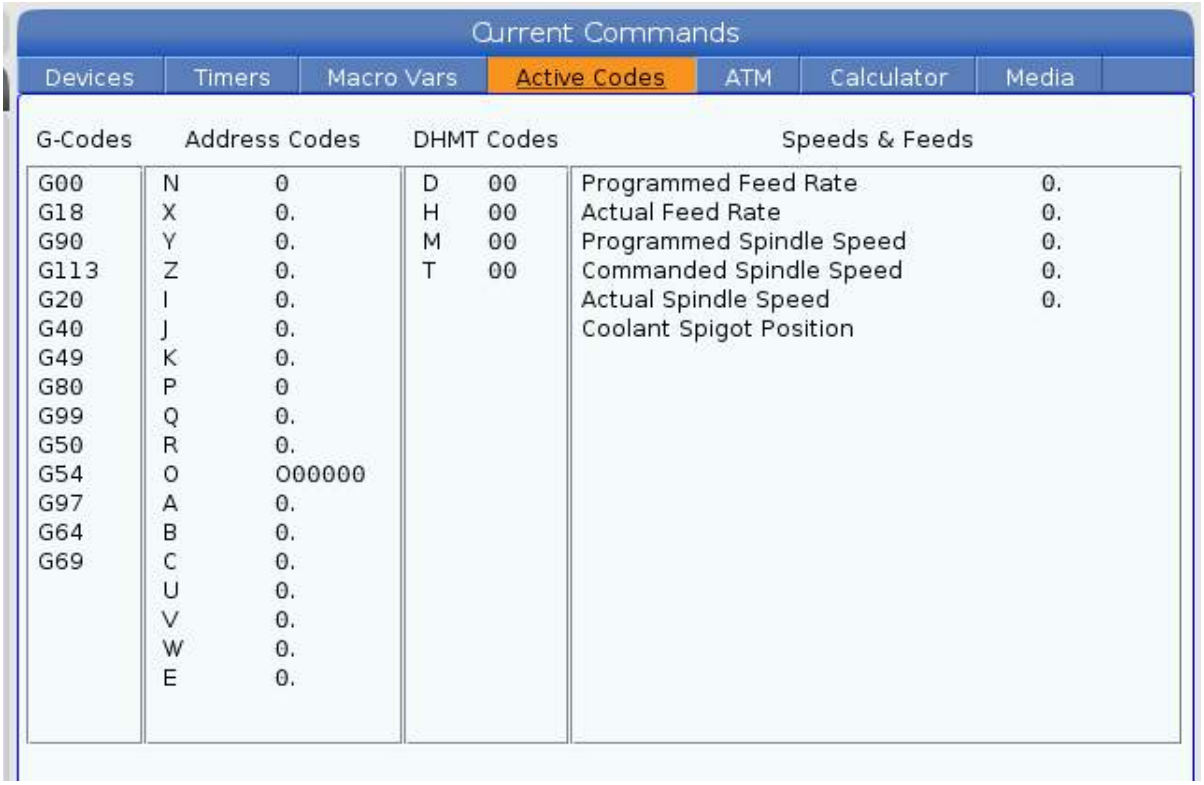

This display gives read-only, real-time information about the codes that are currently active in the program; specifically, the codes that define the current motion type (rapid vs linear feed vs circular feed), positioning system (absolute vs incremental), cutter compensation (left, right or off), active canned cycle, and work offset. This display also gives the active `Dnn`, `Hnn`, `Tnn`, and most recent M-code. If an alarm is active, this shows a quick display of the active alarm instead of the active codes.

Calculator

The calculator tab includes calculators for basic mathematical functions, milling, and tapping.

- Select the calculator tab in the **[CURRENT COMMANDS]** menu.
- Select the calculator tab that you want to use: **`Standard`**, **`Milling`**, or **`Tapping`**.

Standard Calculator

F2.16: Standard Calculator Display

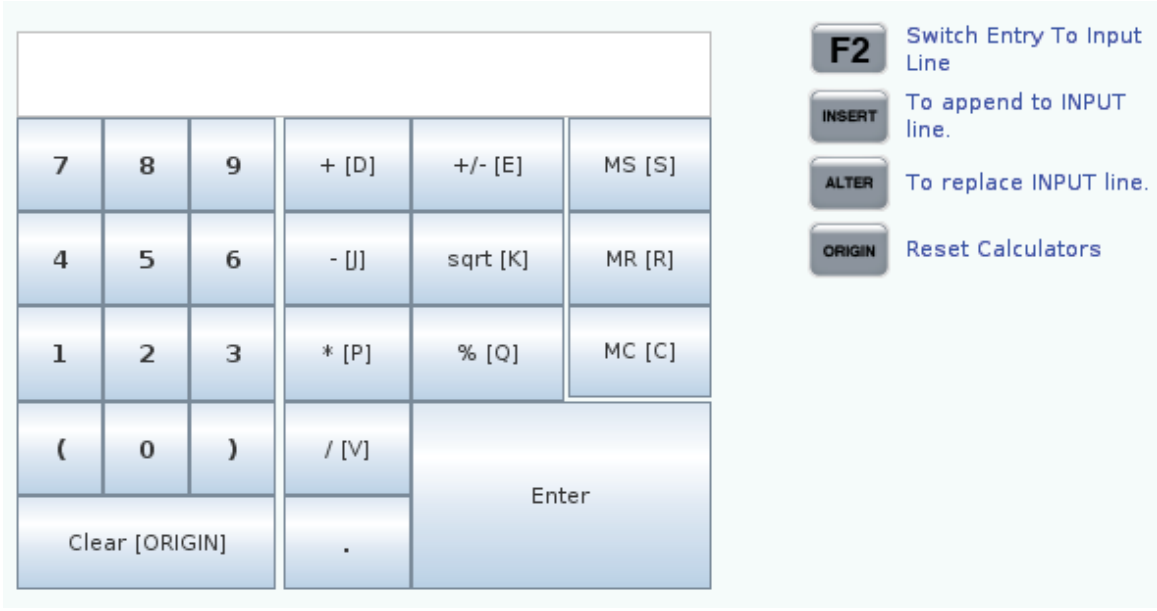

The standard calculator has functions like a simple desktop calculator; with available operations such as addition, subtraction, multiplication, and division, as well as square root and percentage. The calculator lets you easily transfer operations and results to the input line so that you can put them into programs. You can also transfer results into the Milling and Tapping calculators.

- Use the number keys to type operands into the calculator.
- To insert an arithmetic operator, use the letter key that appears in brackets next to the operator you want to insert. These keys are:

Key	Function	Key	Function
[D]	Add	**[K]**	Square Root
[J]	Subtract	**[Q]**	Percentage
[P]	Multiply	**[S]**	Memory Store (MS)
[V]	Divide	**[R]**	Memory Recall (MR)
[E]	Toggle sign (+ / -)	**[C]**	Memory Clear (MC)

- After you have entered data into the calculator input field, you can do any of the following:

NOTE: *These options are available for all calculators.*

Press **[ENTER]** to return the result of your calculation.

Press **[INSERT]** to append the data or the result to the end of the input line.

Press **[ALTER]** to move the data or the result to the input line. This overwrites the current contents of the input line.

Press **[ORIGIN]** to reset the calculator.

Keep the data or the result in the calculator input field and select a different calculator tab. The data in the calculator input field remains available to transfer into the other calculators.

Milling/Turning Calculator

F2.17: Milling/turning Calculator Display

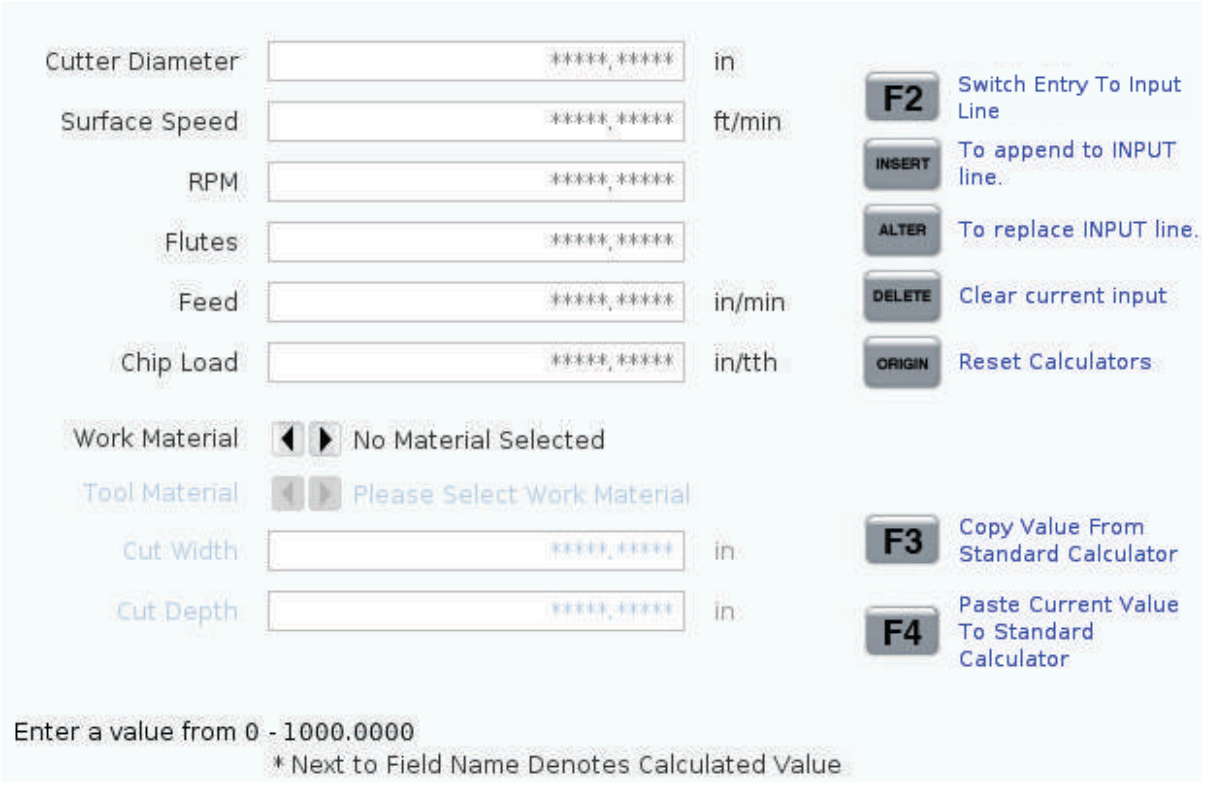

The milling/turning calculator lets you automatically calculate machining parameters based on given information. When you have entered enough information, the calculator automatically displays results in the relevant fields. These fields are marked with an asterisk (*).

- Use the cursor arrow keys to move from field to field.
- Type known values in the appropriate fields. You can also press **[F3]** to copy a value from the standard calculator.
- In the Work Material and Tool Material fields, use the LEFT and RIGHT cursor arrow keys to choose from the available options.
- Calculated values appear highlighted in yellow when they are outside of the recommended range for the workpiece and tool material. Also, when all of the calculator fields contain data (calculated or entered), the milling calculator displays the recommended power for the operation.

Tapping Calculator

F2.18: Tapping Calculator Display

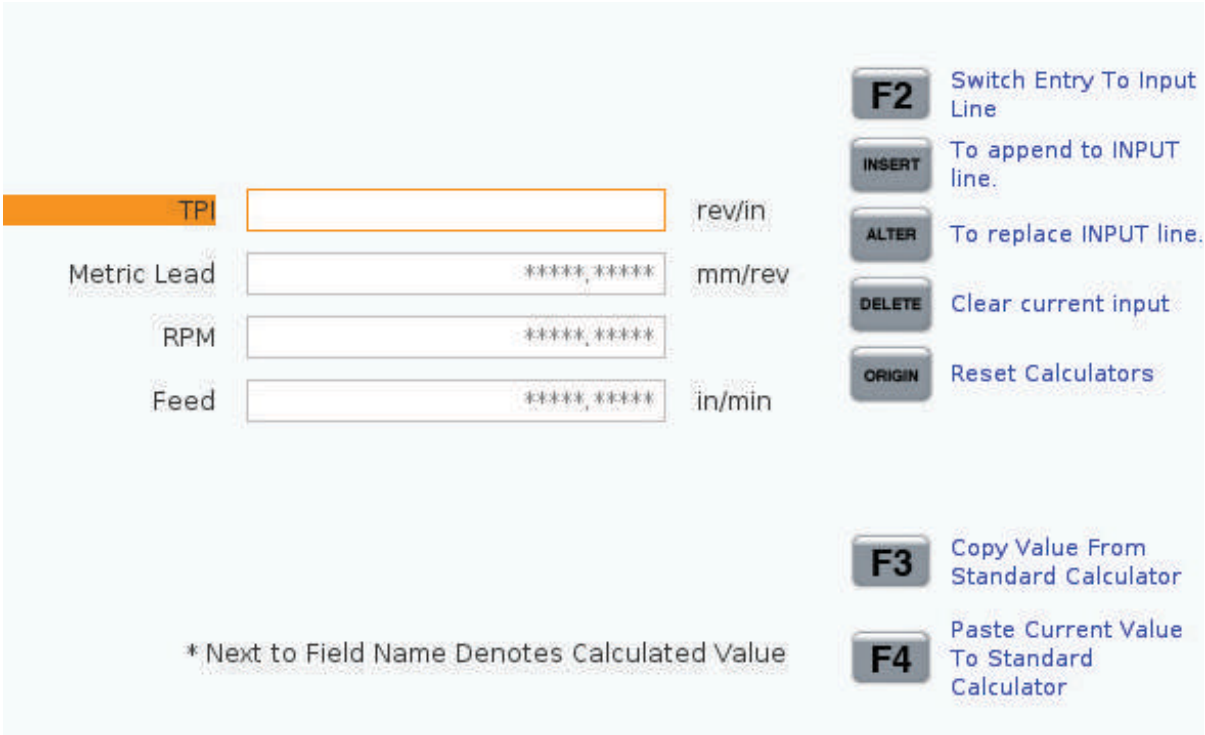

The tapping calculator lets you automatically calculate tapping parameters based on given information. When you have entered enough information, the calculator automatically displays results in the relevant fields. These fields are marked with an asterisk (*).

- Use the cursor arrow keys to move from field to field.

- Type known values in the appropriate fields. You can also press **[F3]** to copy a value from the standard calculator.
- When the calculator has enough information, it puts calculated values in the appropriate fields.

Arc Calculator

F2.19: Arc Calculator Display

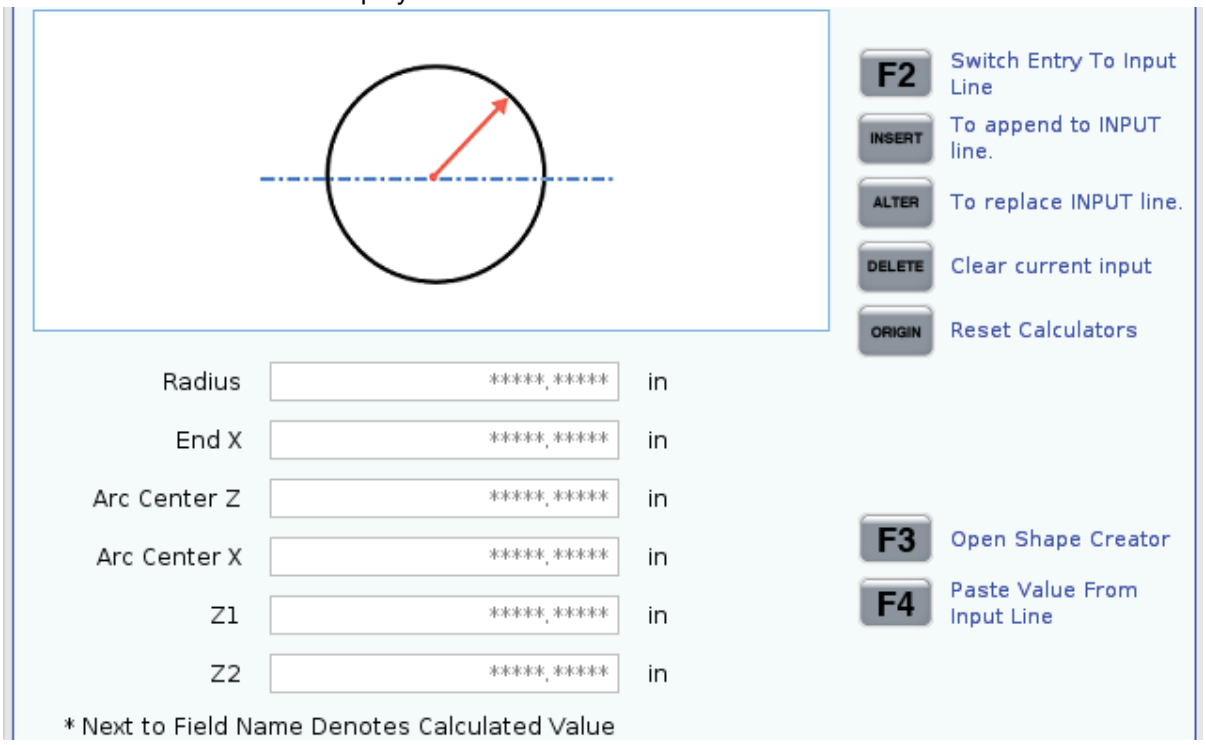

The arc calculator lets you automatically find the start and end points for a radius.

- Use the cursor arrow keys to move from field to field.
- Type known values in the appropriate fields. You can also press **[F3]** to copy a value from the standard calculator.
- When the calculator has enough information, it puts calculated values in the appropriate fields.

Media Display

M130 Lets you display video with audio and still images during program execution. Some examples of how you can use this feature are:

- Providing visual cues or work instructions during program operation
- Providing images to aid part inspection at certain points in a program
- Demonstrating procedures with video

The correct command format is `M130(file.xxx)`, where `file.xxx` is the name of the file, plus the path, if necessary. You can also add a second comment in parentheses to appear as a comment in the media window.

Example: `M130(Remove Lifing Bolts Before Starting Op 2)(User Data/My Media/loadOp2.png);`

NOTE: ***M130*** *uses the subprogram search settings, Settings 251 and 252 in the same way that* ***M98*** *does. You can also use the* ***Insert Media File*** *command in the editor to easily insert an* ***M130*** *code that includes the file path. Refer to page* ***160*** *for more information.*

$FILE Lets you display video with audio and still images outside of program execution.

The correct command format is `( $FILE file.xxx)`, where `file.xxx` is the name of the file, plus the path, if necessary. You can also add a comment between the first parentheses and the dollar sign to appear as a comment in the media window.

To display the media file, highlight the block while in memory mode and press enter. $FILE media display block will be ignored as comments during program execution.

Example: `(Remove Lifing Bolts Before Starting Op 2 $FILE User Data/My Media/loadOp2.png);`

T2.17: Permitted media file formats

Standard	Profile	Resolution	Bitrate
MPEG-2	Main-High	1080 i/p, 30 fps	50 Mbps
MPEG-4 / XviD	SP/ASP	1080 i/p, 30 fps	40 Mbps
H.263	P0/P3	16 CIF, 30fps	50 Mbps
DivX	3/4/5/6	1080 i/p, 30fps	40 Mbps
Baseline	8192 x 8192	120 Mpixel/sec	-
PNG	-	-	-
JPEG	-	-	-

NOTE: *For the fastest loading times, use files with pixel dimensions divisible by 8 (most unedited digital images have these dimensions by default), and a maximum resolution of 1920 x 1080.*

Your media appears in the Media tab under Current Commands. The media displays until the next **`M130`** displays a different file, or **`M131`** clears the media tab contents.

F2.20: Media Display Example - Work Video Instruction during a Program

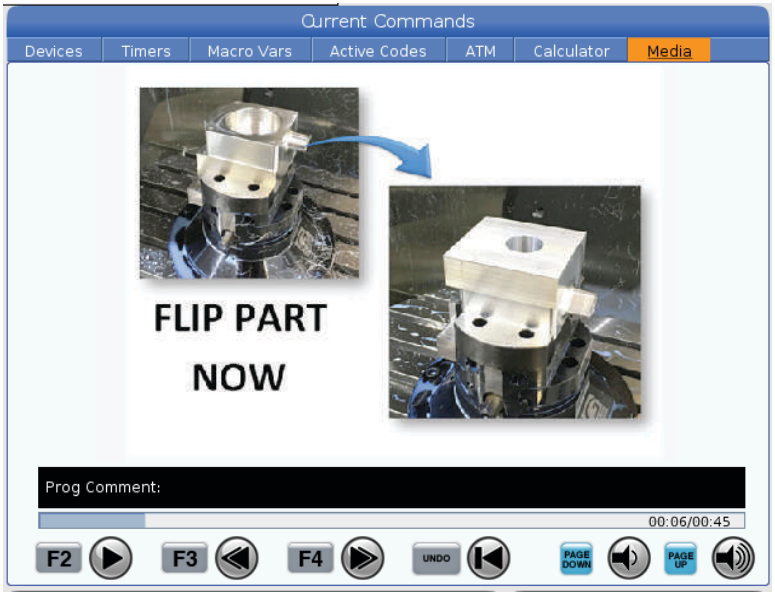

T2.18: Troubleshooting

Symptom	Possible Cause	Corrective Action
Error *Encrypted PDF* is generated.	The PDF file is encrypted.	The Haas control does not support encryption or passwords. Decrypt or remove password protection for the PDF on a computer.
Error *File not found* is generated.	The File could not be found at the location specified.	Verify that the file is where you expect it to be.Use the M130 path generator in the Editor to verify that the path specified in your program is correct.

Symptom	Possible Cause	Corrective Action
Error *Invalid File* is generated.	The control had a problem identifying or interacting with the file.	If the PDF is on USB or Netshare try copying it to the My Media folder on your control inside User Data and test opening it from there.If you already copied it onto the local control verify the file size or try to copy it to another place in the control to make sure the file was not corruptedVerify that the PDF can be opened on your computer
Error *Unable to Render* is generated	The control could read the image but it did not have the available space to display it.	Sometimes this message is generated when the control is busy performing other actions in the background. Try the following things: "Change pages in the template "Stop running a program (if possible) "Reload the template "Zoom outIf none of those steps worked the PDF page you are displaying might be too large for the control to process.Try editing the specific page to a smaller size on a computer before loading it again.

Active Codes

F2.21: Active Codes Display Example

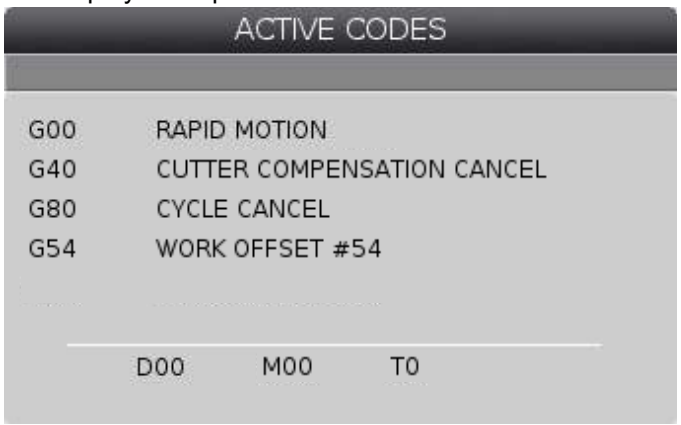

This display gives read-only, real-time information about the codes that are currently active in the program; specifically, the codes that define the current motion type (rapid vs linear feed vs circular feed), positioning system (absolute vs incremental), cutter compensation (left, right or off), active canned cycle, and work offset. This display also gives the active `Dnn`, `Hnn`, `Tnn`, and most recent M-code. If an alarm is active, this shows a quick display of the active alarm instead of the active codes.

Active Tool

F2.22: Active Tool Display Example

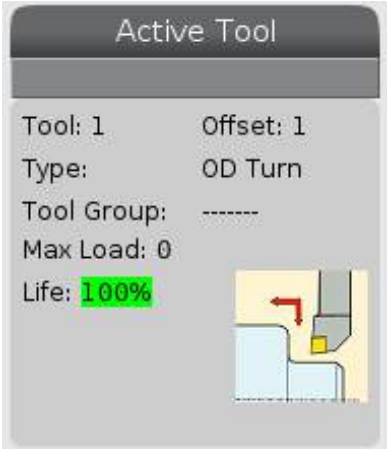

- The tool number
- The offset number
- The type of tool (if specified in the tool offsets table)
- The tool group number (if specified in the ATM table)
- Maximum tool load (the highest load, in percent, that has been put on the tool)

- The remaining percentage of tool life or tool group
- An example image of the tool type (if specified)

Coolant Display

F2.23: Coolant Level Display Example

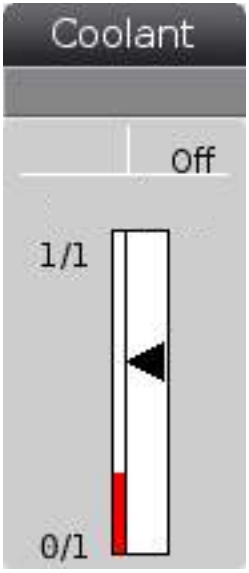

The coolant display appears in the upper-right of the screen in **OPERATION:MEM** mode.

The first line tells you if the coolant is **ON** or **OFF**.

The next line shows the position number of the optional Programmable Coolant Spigot (**P-COOL**). The positions are from **1** to **34**. If the option is not installed, no position number appears.

In the coolant gauge, a black arrow shows the coolant level. Full is **1/1** and empty is **0/1**. To avoid coolant flow problems, keep the coolant level above the red range. You can also see this gauge in **DIAGNOSTICS** mode under the **GAUGES** tab.

Timers & Counters Display

F2.24: Timers & Counters Display Example

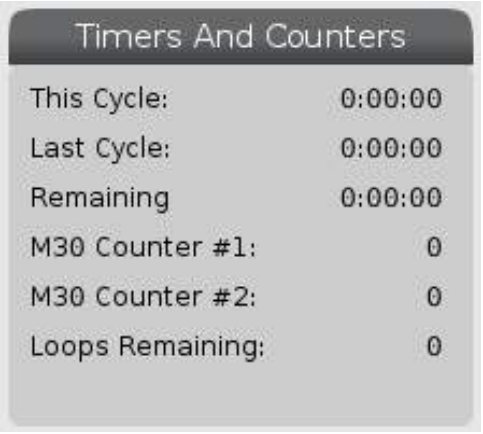

The timer section of this display gives information about cycle times (This Cycle, Last Cycle, and Remaining).

The counter section has two M30 counters and a Loops Remaining display.

- M30 Counter #1: and M30 Counter #2: every time a program reaches an **M30** command, the counters increase by one. If Setting 118 is on, the counters also increment every time a program reaches an M99 command.
- If you have macros, you can clear or change M30 Counter #1 with #3901 and M30 Counter #2 with #3902 (`#3901=0`).
- Refer to page **51** for information on how to reset the timers and counters.
- Loops Remaining: shows the number of subprogram loops remaining to complete the current cycle.

Alarms and Messages Display

Use this display to learn more about machine alarms when they occur, view your machine's entire alarm history, look up definitions of alarms that can occur, view created messages, and show the keystroke history.

Press **[ALARMS]**, then select a display tab:

- The **ACTIVE ALARM** tab shows the alarms that currently affect machine operation. Use **[PAGE UP]** and **[PAGE DOWN]** to see the other active alarms.
- The **MESSAGES** tab shows the messages page. The text you put on this page stays there when you power the machine off. You can use this to leave messages and information for the next machine operator, etc.
- The **ALARM HISTORY** tab shows a list of the alarms that have recently affected machine operation. You can also search for an alarm number or alarm text. To do this type in the alarm number or the desired text and press **[F1]**.

- The **ALARM VIEWER** tab shows a detailed description of all the alarms. You can also search for an alarm number or alarm text. To do this type in the alarm number or the desired text and press **[F1]**.
- The **KEY HISTORY** tab shows up to the last 2000 keystrokes.

Add Messages

You can save a message in the **MESSAGES** tab. Your message stays there until you remove it or change it, even when you turn the machine off.

1. Press **[ALARMS]**, select the **MESSAGES** tab, and press the **[DOWN]** cursor arrow key.
2. Type your message.

   Press **[CANCEL]** to backspace and delete. Press **[DELETE]** to delete an entire line. Press **[ERASE PROGRAM]** to delete the entire message.

System Status Bar

The System Status Bar is the read-only section of the screen located in the bottom, center. It displays messages for the user about actions they have taken.

Position Display

The Position display shows the current axis position relative to four reference points (Work, Distance-to-go, Machine, and Operator). In any mode, press **[POSITION]** and use cursor keys to access the different reference points displayed in tabs.The last tab display shows all the reference points on the same screen.

T2.19: Axis Position Reference Points

Coordinate Display	Function
WORK (G54)	This tab displays the axis positions relative to part zero. On power-up, this position uses work offset G54 automatically. It displays the axis positions relative to the most recently-used work offset.
DIST TO GO	This tab displays the distance remaining before the axes reach their commanded position. When in **SETUP:JOG** mode, you can use this position display to show a distance moved. Change modes (MEM, MDI) and then switch back to **SETUP:JOG** mode to zero this value.
MACHINE	This tab displays the axis positions relative to machine zero.

Coordinate Display	Function
OPERATOR	This tab shows the distance you have jogged the axes. This does not necessarily represent the actual distance the axis is from machine zero, except when the machine is first powered on.
ALL	This tab displays all reference points on the same screen.

Axis Display Selection

You can add or remove axes in the Positions displays. While a **Positions** display tab is active, press **[ALTER]**. The axis display selection window comes in from the right side of the screen.

F2.25: Axis Display Selector

Use the cursor arrow keys to highlight an axis, and press **[ENTER]** to toggle it on and off for display. The positions display will show axes that have a check mark. Press **[ALTER]** to close the axis display selector.

NOTE: *You can display a maximum of (5) axes.*

Input Bar

F2.26: Input Bar

The input bar is the data entry section located in the bottom-left corner of the screen. This is where your input appears as you type it.

Special Symbol Input

Some special symbols are not on the keypad.

T2.20: Special Symbols

Symbol	Name
_	underscore
^	caret
~	tilde
{	open curly brackets
}	closed curly brackets
\	backslash
|	pipe
<	less than
>	greater than

Do these steps to enter special symbols:

1. Press **[LIST PROGRAMS]** and select a storage device.
2. Press **[F3]**.

   The **[FILE]** drop-down menu shows:

3. Select **`Special Symbols`** and press **[ENTER]**.

   The **`SPECIAL SYMBOLS`** pick list shows:

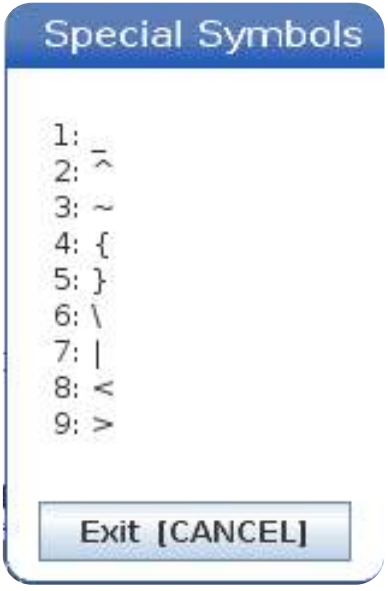

4. Enter a number to copy the associated symbol to the **`INPUT:`** bar.

For example, to change a directory's name to `MY_DIRECTORY`:

1. Highlight the directory with the name that you want to change.
2. Type `MY`.
3. Press **[F3]**.
4. Select **`SPECIAL SYMBOLS`** and press **[ENTER]**.
5. Press **[1]**.
6. Type `DIRECTORY`.
7. Press **[F3]**.
8. Select **`RENAME`** and press **[ENTER]**.

Main Spindle Display

F2.27: Main Spindle (Speed and Feed Status) Display

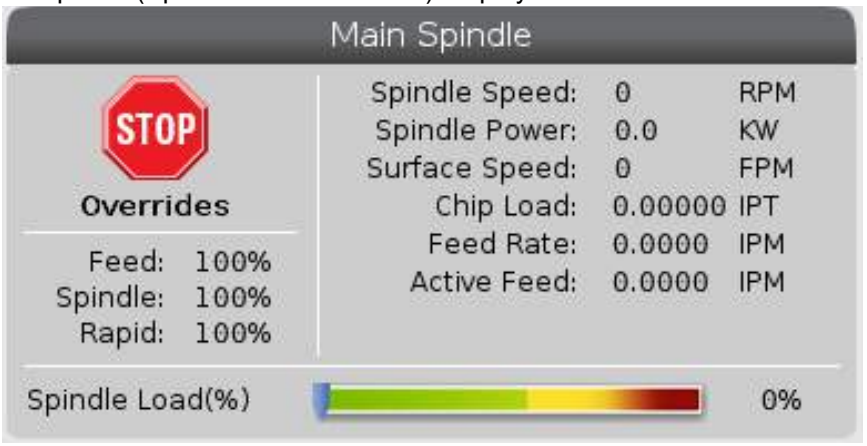

The first column of this display gives you information about feedrate, spindle, and rapid overrides.

The second column displays the current spindle speed in rpm and spindle load in kW. The spindle load value reflects the actual spindle power to the tool. The next values presented are linked: surface speed of the rotating tool in fpm, the actual chip load in in/tth, and the programmed feed rate in in/min. Active feed rate displays the actual feed rate including any manual overrides.

The spindle load meter indicates the spindle load as a percentage of motor capacity.

Gauge Display

F2.28: Diagnostic Gauges Display

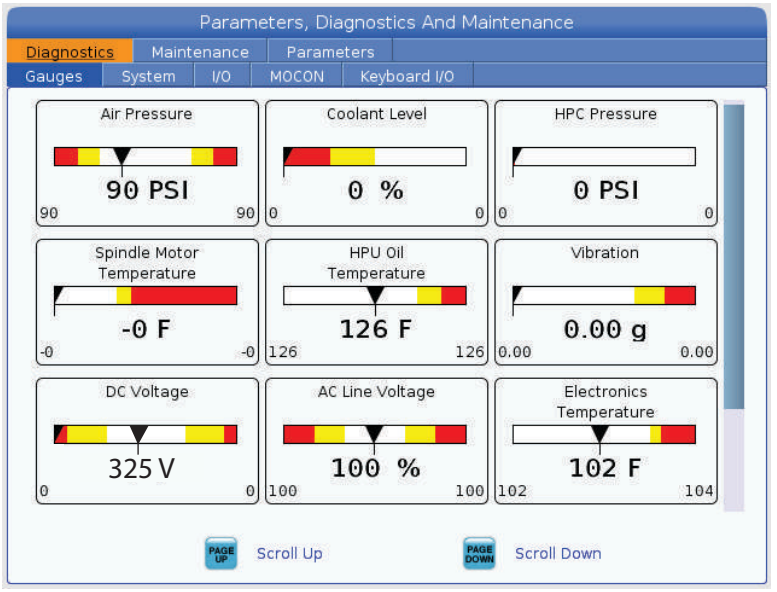

This display quickly shows you information about various machine states, including fluid pressure, voltages, and component temperatures. Press the **[PAGE DOWN]** button to scroll to see more gauges.

Setting 9 determines the units that the gauges use for fluid pressure and temperature. If Setting 9 has a value of **INCH**, the gauges display air pressure in psi and temperature in degrees Fahrenheit. If Setting 9 has a value of **MM**, the gauges display fluid pressure in bar and temperature in degrees Celsius.

Machine Activation Display

Contact your Haas Factory Outlet (HFO) for help with machine activation. Be prepared to give the HFO representative the information on this screen (Serial Number, Mac Address, Software Version, Activation Code).

Diagnostics Display

This display shows information about your machine's configuration. Haas Service may ask you for some of the information from this screen when you call. You can also find information about machine run time, bill time, the number of tool changes, the number of power cycles, and total power-on time.

Lubrication Tests Display

Haas Service technicians use this display to test your machine's lubrication system. Haas Service may also ask you to do these tests yourself. To avoid over-lubrication, you should not do these tests unless Haas Service directs you to do so.

2.2.5 Screen Capture

The control can capture and save an image of the current screen to an attached USB device or the User Data memory.

1. Enter a filename if desired. If no filename is entered, the system will use the default filename (see note).
2. Press **[SHIFT]**.
3. Press **[F1]**.

NOTE: *The control uses the default filename* **`snapshot#.png`***. The* **`#`** *starts from 0 and increments each time you capture a screen. This counter resets at power off. Screen captures that you take after a power cycle overwrite previous screen captures that have the same filename on the User Data memory.*

The control saves the screen capture to your USB device or control memory. The message *`Snapshot saved to USB`* or *`Snapshot saved to User Data`* appears when the process finishes.

2.2.6 Error Report

The control can generate an error report that saves the state of the machine that is used for analysis. This is useful when helping the HFO troubleshoot an intermittent problem.

1. Press **[SHIFT]**.
2. Press **[F3]**.

NOTE: *Be sure to always generate the error report with the alarm or the error is active.*

The control saves the error report to your USB device or control memory.The error report is a zip file that includes a screen capture, the active program, and other information used for diagnostics. Generate this error report when an error or an alarm occurs. E-mail the error report to your local Haas Factory Outlet.

2.3 Tabbed Menu Basic Navigation

The Haas control uses tabbed menus for several modes and displays. Tabbed menus keep related data together in an easy-to-access format. To navigate these menus:

1. Press a display or mode key.

   The first time you access a tabbed menu, the first tab (or sub-tab) is active. The highlight cursor is at the first available option in the tab.

2. Use the cursor keys or the **[HANDLE JOG]** control to move the highlight cursor within an active tab.

3. To choose a different tab in the same tabbed menu, press the mode or display key again.

NOTE: *If the cursor is at the top of the menu screen, you can also press the* **[UP]** *cursor arrow key to select a different tab.*

   The current tab becomes inactive.

4. Use the cursor keys to highlight a tab or a sub-tab, and press the **[DOWN]** cursor arrow key to use the tab.

NOTE: *You cannot make the tabs active in the* **POSITIONS** *tabbed display.*

5. Press a different display or mode key to work with a different tabbed menu.

2.4 LCD Touchscreen Overview

The touchscreen feature allows you to navigate the control in a more intuitive way.

NOTE: *If the touchscreen hardware is not detected at power on, a notification 20016 Touchscreen not detected will appear in the alarm history.*

T2.21: Touchscreen Settings

Settings
381 - Enable / Disable Touchscreen
383- Table Row Size

Settings
396 - Virtual Keyboard Enabled
397 - Press and Hold Delay
398 - Header Height
399 - Tab Height
403 - Choice Popup Button Size

F2.29: Touchscreen status icons - [1] Software does not support Touchscreen [2] Touchscreen is Disabled, [3] Touchscreen is Enabled.

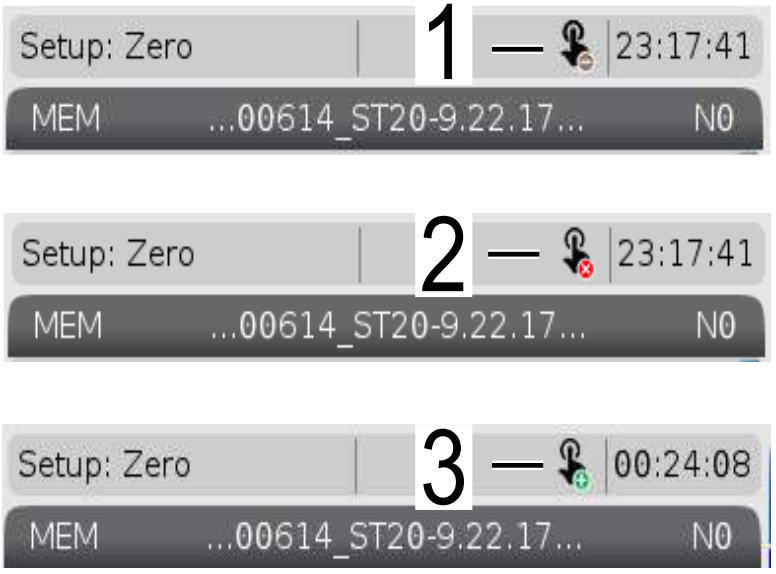

An icon appears on top left of the screen when the touchscreen is enabled or disabled.

T2.22: Functions excluded from Touchscreen

Functions	Touchscreen
[RESET]	Not available
[EMERGENCY STOP]	Not available

Functions	Touchscreen
[CYCLE START]	Not available
[FEED HOLD]	Not available

2.4.1 LCD Touchscreen - Navigation Tiles

Press the Menu[1] icon on the screen to display the display icons [2].

F2.30: [1] Menu Panel Icon, [2] Display Icons.

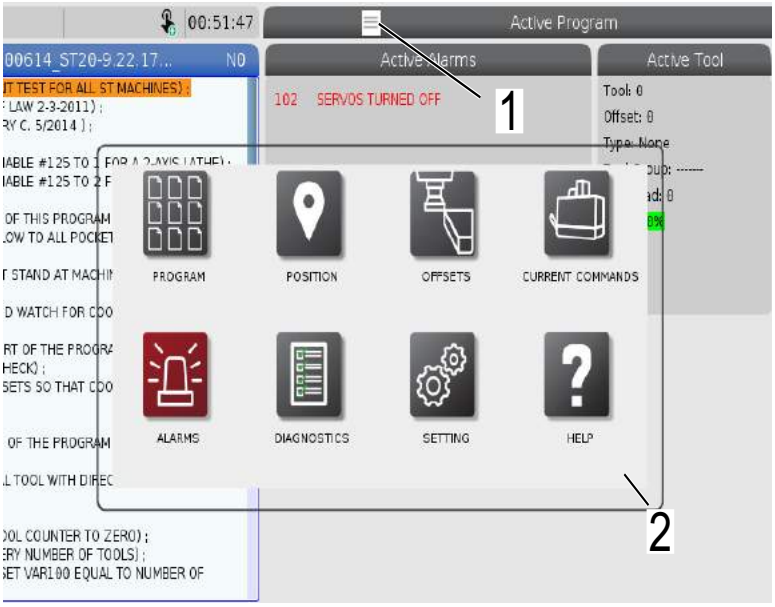

F2.31: Settings options Icons [3].

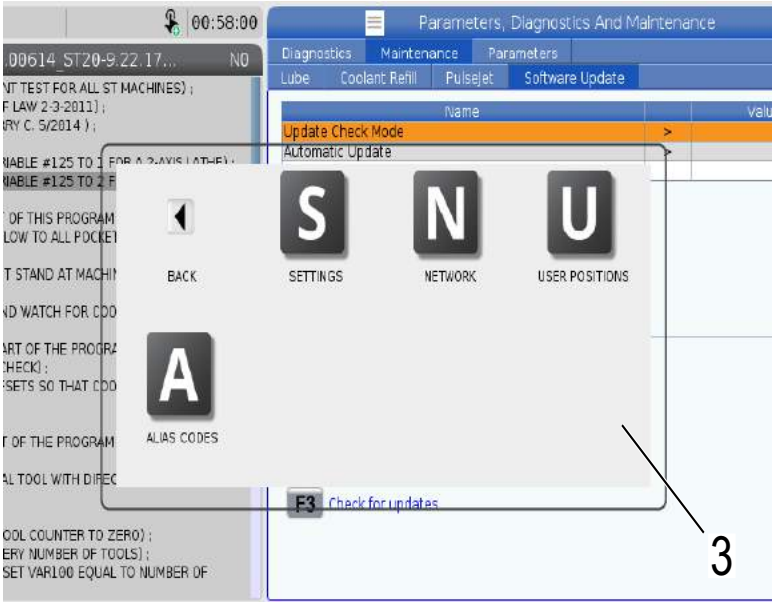

- Press and hold the display icon, to navigate to a specific tab. For example if you want to go to the Network page, press and hold the **[SETTINGS]** icon until the settings options [3] are shown.
- Press the back icon to go back to the main menu.
- To close the popup box touch anywhere else outside the popup box.

F2.32: Operation Mode Panel

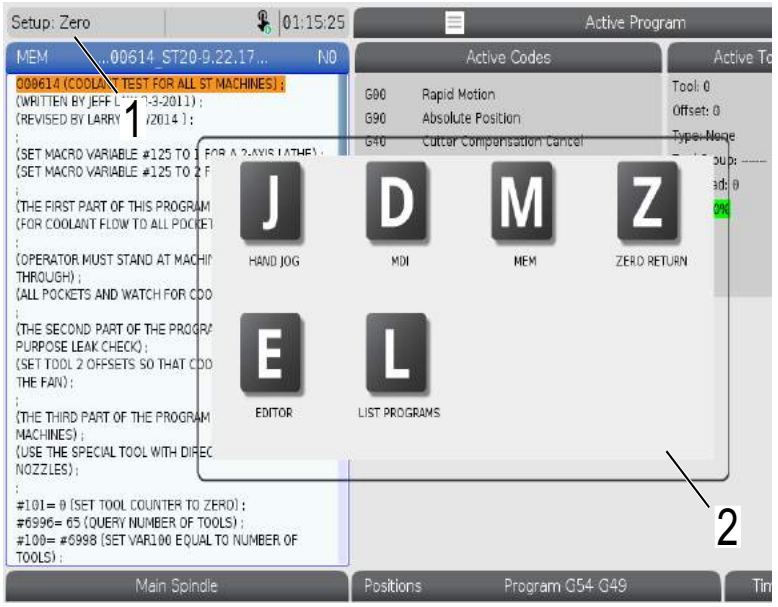

- Press the upper left corner [1] of the screen to have the operation mode panel popup box [2] to appear. Press the mode icon to put the machine in that mode.

2.4.2 LCD Touchscreen - Selectable Boxes

F2.33: Icon Help

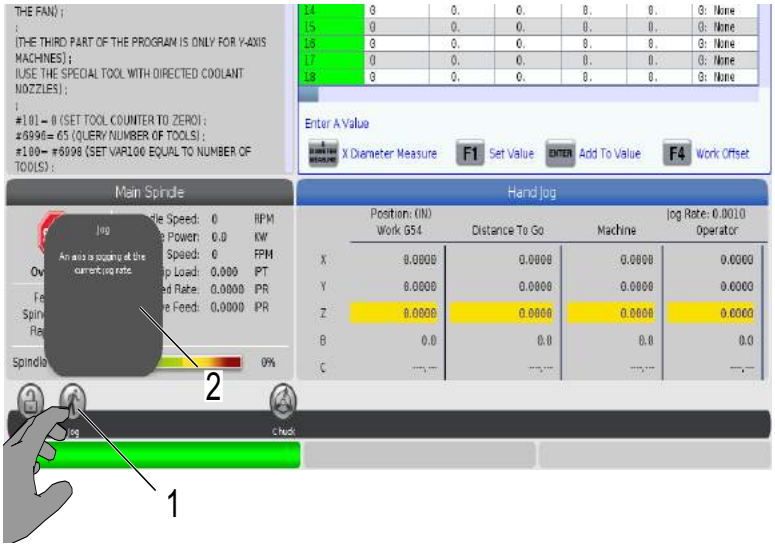

- Touch and hold the icons [1] on the bottom of the screen to see the meaning [2] of the icon. The help popup will disappear when you let go of the icon.

F2.34: Selectable tables and function buttons.

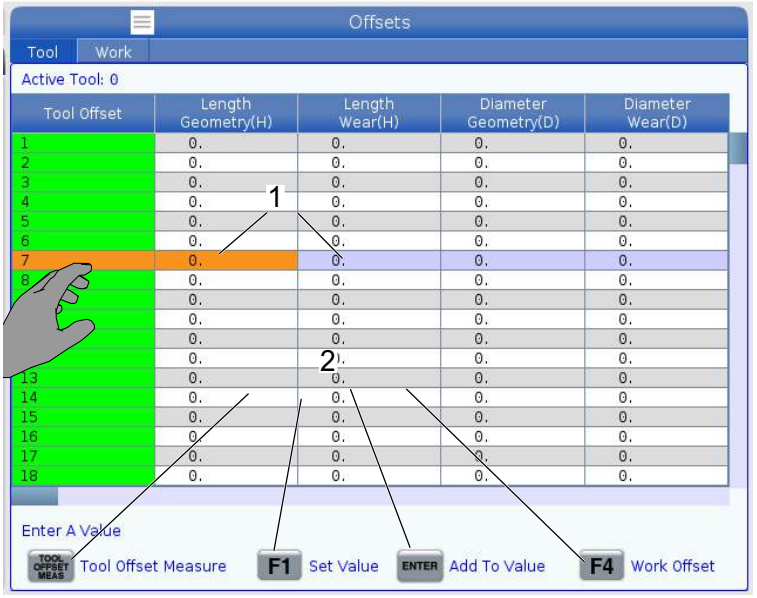

- The rows and columns fields [1] on tables are selectable. To increase the row size refer to setting 383 - Table Row Size.
- The function button icons [2] that appear on the boxes can also be pressed to use the function.

F2.35: Selectable Display Boxes

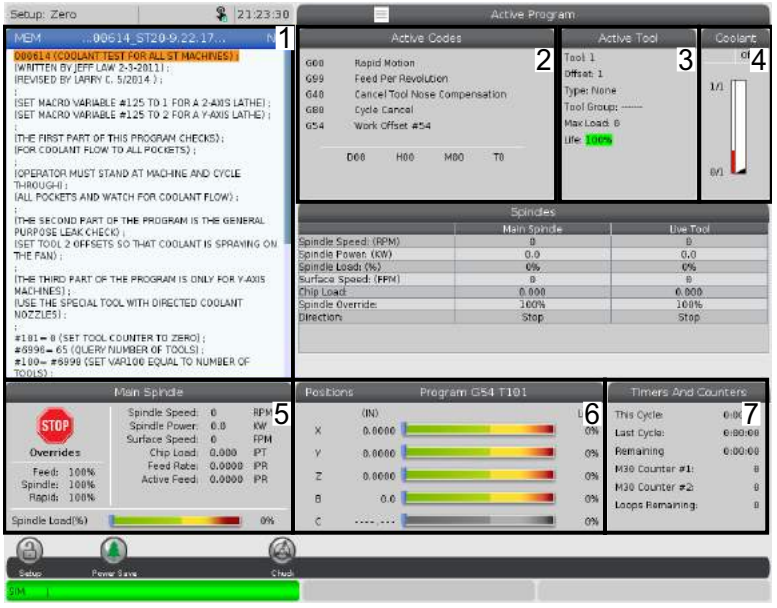

- Display boxes [1 - 7] are selectable. For example if you want to go to the Maintenance tab, press the coolant display box [4].

2.4.3 LCD Touchscreen - Virtual Keyboard

The virtual keyboard allows you to input text on the screen, without using the keypad. To enable this function set setting 396 - Virtual Keyboard Enabled to `On`.

F2.36: Virtual Keyboard Display

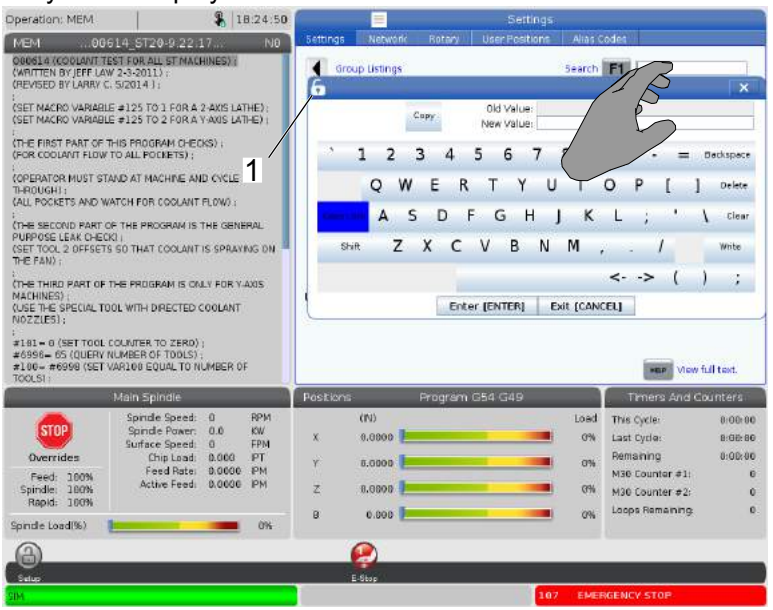

Press and hold any input line for the virtual keyboard to appear.

The keyboard can be moved holding your finger down on the blue top bar and dragging it to a new position.

The keyboard can also be locked in place by pressing the lock icon [1].

2.4.4 LCD Touchscreen - Program Editing

F2.37: Drag and Drop from List Program

- You can drag and drop programs from **[LIST PROGRAM]** to **[MEM]** by dragging the file [1] over to the **[MEM]** display.

F2.38: Copy, Cut, and Paste Handle Bars

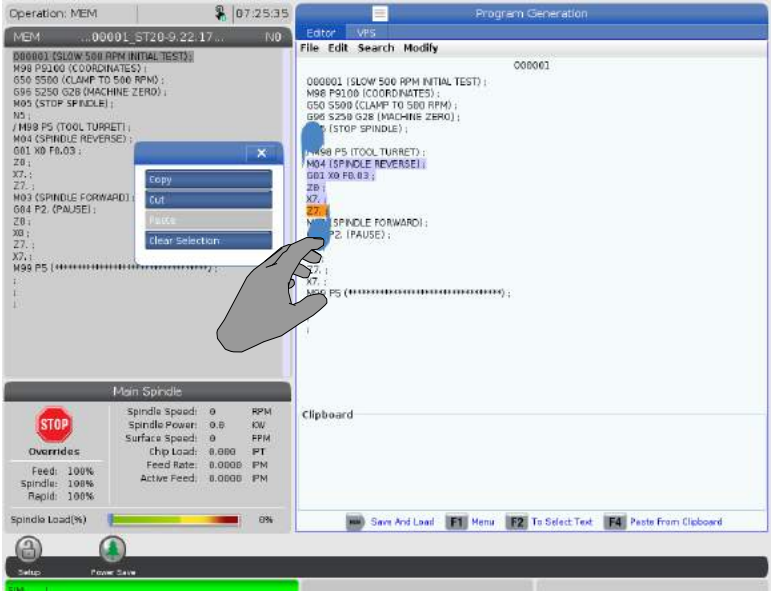

- In edit mode you can drag your fingers across the code to use the handle bars to copy, cut and paste a section of the program.

2.4.5 LCD Touchscreen - Maintenance

Use the touchscreen configuration page to calibrate, test, and restore default settings. The touchscreen configuration is located in the maintenance section. Press **[DIAGNOSTIC]** to go to the Maintenance and navigate to the Touchscreen tab.

F2.39: Touchscreen Configuration Tab

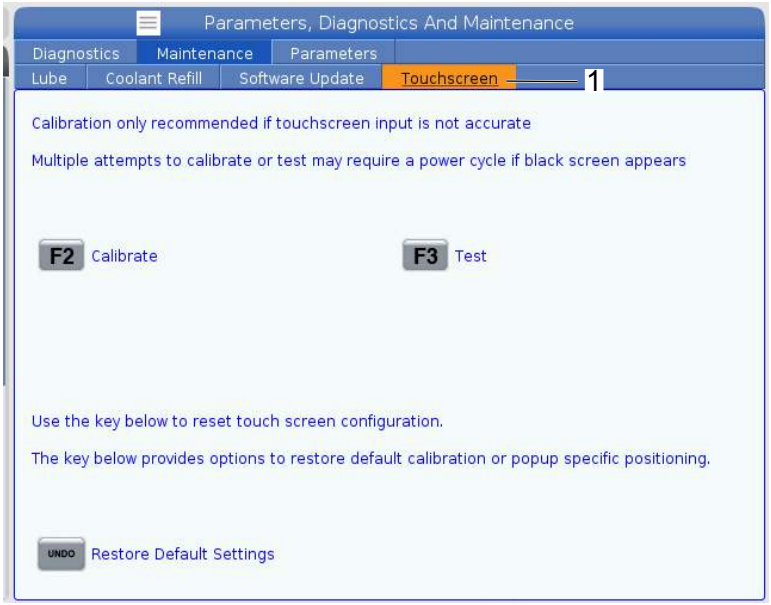

2.5 Help

Use the **[HELP]** key on the control when you need to access information about machine functions, commands, or programming printed in this manual.

To open a help topic:

1. Press **[HELP]**. You are presented with icon options for different help information. (Press **[HELP]** again to exit the **`Help`** window.)
2. Use the cursor arrows or **[HANDLE JOG]** control to highlight an icon option, then press **[ENTER]**. Press the **[UP]** or **[DOWN]** cursor arrows or turn the **[HANDLE JOG]** control to scroll through pages larger than the screen.
3. Press **[HOME]** to go to the top directory level or top of a page.

4. To search for help content by keyword, type your search term in the input field, then press **[F1]** to execute the search. Search results for the keyword appear in the **HELP** window.
5. Press the **[LEFT]**/**[RIGHT]** cursor arrow keys to go to the previous/next page on the contents pages.

2.5.1 Active Icon Help

Displays a list of the currently active icons.

2.5.2 Active Window Help

Displays the help system topic related to the currently active window.

2.5.3 Active Window Commands

Displays a list of the available commands for the active window. You can use the keys listed in parentheses, or you can select a command from the list.

2.5.4 Help Index

This option provides a list of manual topics that link to the information in the on-screen manual. Use the cursor arrows to highlight a topic of interest, and then press **[ENTER]** to access that section of the manual.

2.6 More Information Online

For updated and supplemental information, including tips, tricks, maintenance procedures, and more, visit the Haas Service page at www.HaasCNC.com. You can also scan the code below with your mobile device to go directly to the Haas Service page:

Chapter 3: Control Icons

3.1 Next Generation Control Icon Guide

The control screen shows icons to quickly give you information about machine status. Icons tell you about current machine modes, your program as it runs, and machine maintenance status.

The icon bar is near the bottom of the control pendant display, above the input and status bars.

F3.1: Icon Bar Location

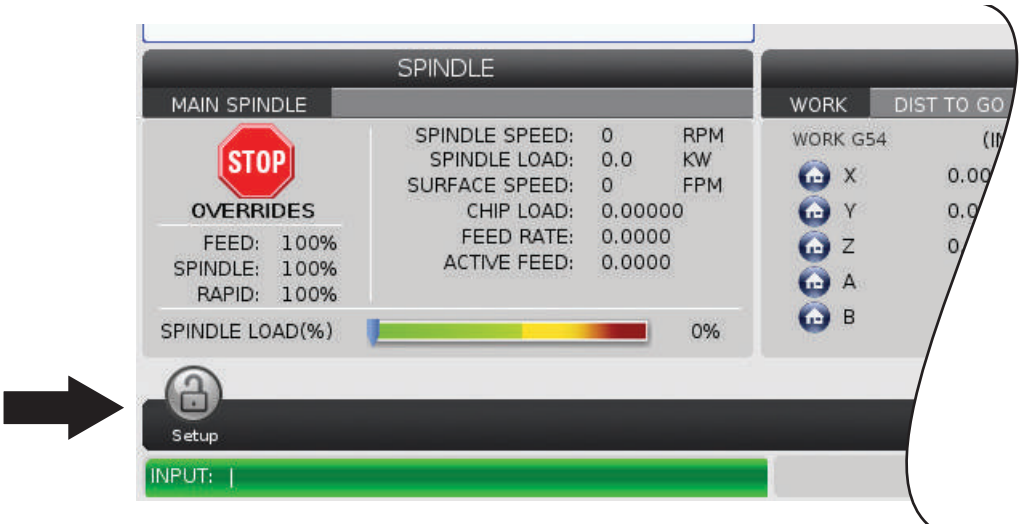

T3.1: Lathe Control Icons

Name	Icon	Meaning
Setup		Setup mode is locked; the control is in Run mode. Most machine functions are disabled or limited while the machine doors are open.
Setup		Setup mode is unlocked; the control is in Setup mode. Most machine functions are available, but may be limited while the machine doors are open.
Bar Feeder is Not Aligned		This icon appears when the bar feeder is enabled and out of position. Make sure the bar feeder is aligned with the feeding hole.
Bar Feeder Cover is Open		This icon appears when the bar feeder is enabled and the bar feeder cover is open
Bar Feeder is Out of Bars	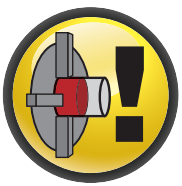	This icon appears when the bar feeder has run out of the bars.

Name	Icon	Meaning
Cycle Door		The door must be cycled at least once to ensure that the door sensor is working. This icon appears after **[POWER UP]** If the user has not yet cycled the door.
Door Open		Warning, door is open.
Light Curtain Breach	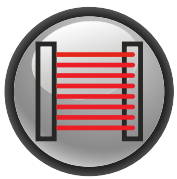	This icon appears when the machine is idle and the light curtain is triggered. It also appears when a program is running and the light curtain is running. This icon disappears when the obstacle is removed from the light curtain line of sight.
Light Curtain Hold		This icon appears when a program is running and the light curtain is triggered. This icon will clear the next time **[CYCLE START]** is pressed.
Running		The machine is running a program.
Jog		An axis is jogging at the current jog rate.

Name	Icon	Meaning
Jog Warning		This icon appears when setting 53 Jog W/O Zero Return is set to On and the machine is in handle jog mode. ***NOTE:*** *Setting 53 Jog W/O Zero Return is set to On automatically if APL hardware is installed and the machine has not been zeroed.*
APL Mode		This icon appears when the machine is in APL Mode.
Power Saving		The power-saving servos-off feature is active. Setting 216, SERVO AND HYDRAULIC SHUTOFF, designates the time period allowed before this feature activates. Press a key to activate the servos.
Jog	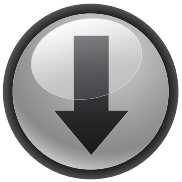	This icon appears while the control returns to the workpiece during a run-stop-jog-continue operation.
Jog		You have pressed **[FEED HOLD]** during the return portion of a run-stop-jog-continue operation.

Name	Icon	Meaning
Jog		This icon prompts you to jog away during a run-stop-jog-continue operation.
Feed Hold		The machine is in feed hold. Axis motion has stopped, but the spindle continues to turn.
Feed	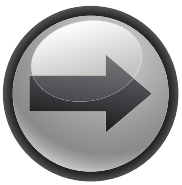	The machine is executing a cutting move.
Rapid		The machine is executing a non-cutting axis move (`G00`) at the fastest possible rate. Overrides can affect the actual rate.
Dwell		The machine is executing a dwell (`G04`) command.
Singbk Stop		**`SINGLE BLOCK`** mode is active, and the control needs a command to continue.

Name	Icon	Meaning
Door Hold		Machine motion has stopped because of door rules.
Restricted Zone		A current axis position is in the restricted zone.
Remote Jog		The optional remote jog handle is active.
Low Gearbox Oil Flow		This icon appears when low gearbox oil flow persists for 1 minute.
Low Gearbox Oil		The control detected a low gearbox oil level. ***NOTE:*** *The control only monitors the gearbox oil level condition at power-on. Once the gearbox low oil condition is detected, the icon will clear on the next power on when a normal level condition is detected.*

Name	Icon	Meaning
Dirty HPC/HPFC Filter		Clean the High-Pressure Coolant or High-Pressure Flood Coolant filter.
Low Coolant Concentrate		Fill the concentrate reservoir for the coolant refill system.
Low Lube		The spindle lubrication oil system detected a low oil condition, or the axis ball screw lubrication system detected a low grease or low pressure condition.
Low Oil		The rotary brake oil level is low.
Residual Pressure		Before a lubrication cycle the system detected residual pressure from the grease pressure sensor. This can be caused by an obstruction in the axes grease lubrication system.
HPU Oil Low		The HPU oil level is low. The HPU oil level is low. Check the oil level and add the recommended oil for the machine.

Name	Icon	Meaning
HPU Oil Temperature (Warning)	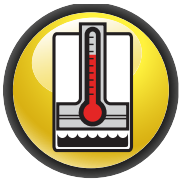	The oil temperature is too high to reliably operate the HPU.
Mist Filter		Clean the mist extractor filter.
Low Coolant (Warning)		Coolant level is low.
Low Air Flow		Inch Mode - Air flow is not sufficient for correct machine operation.
Low Air Flow		Metric Mode - Air flow is not sufficient for correct machine operation.
Spindle		When you press **[HANDLE SPINDLE]**, the jog handle varies the spindle override percentage.

Name	Icon	Meaning
Feed		When you press **[HANDLE FEED]**, the jog handle varies the feed rate override percentage.
Handle Scroll		When you press **[HANDLE SCROLL]**, the jog handle scrolls through the text.
Mirroring		Secondary spindle swap with Z-Axis mirroring active.
Mirroring		Mirroring mode is active. Either `G101` is programmed or Setting 45, 46, 47, 48, 80, or 250 (mirror image of axis X, Y, Z, A, B, or C) is set to ON.
Chuck		The chuck is unclamped.
Chuck Unclamp OD		The chuck is unclamped.

Name	Icon	Meaning
C-Axis Engaged		The C-axis is engaged.
Spindle Fan Failed		This icon appears when the spindle fan stops operating.
Electronics Overheat (Warning)		This icon appears when the control has detected cabinet temperatures are approaching levels that are potentially dangerous to the electronics. If the temperature reaches or exceeds this recommended level alarm 253 ELECTRONICS OVERHEAT will be generated. Inspect the cabinet for clogged air filters and correctly operating fans.
Electronics Overheat (Alarm)		This icon appears when the electronics remains in the overheat state for too long. The machine will not operate until the condition is corrected. Inspect the cabinet for clogged air filters and correctly operating fans.
Transformer Overheat (Warning)		This icon appears when the transformer is detected to be overheated for more than 1 second.

Name	Icon	Meaning
Transformer Overheat (Alarm)		This icon appears when the transformer remains in the overheat state for too long. The machine will not operate until the condition is corrected.
Low Voltage (Warning)		The PFDM detects low incoming voltage. If the condition continues, the machine cannot continue operation.
Low Voltage (Alarm)		The Power Fault Detect Module (PDFM) detects incoming voltage that is too low to operate. The machine will not operate until the condition is corrected.
High Voltage (Warning)		The PFDM detects incoming voltage above a set limit, but still within operating parameters. Correct the condition to prevent damage to machine components.
High Voltage (Alarm)		The PFDM detects incoming voltage that is too high to operate and could cause damage to the machine. The machine will not operate until the condition is corrected.
High Air (Warning)		The air pressure to the machine is too high to reliably operate pneumatic systems. Correct this condition to prevent damage to or incorrect operation of pneumatic systems. You may need to install a regulator at the machine's air input.

Name	Icon	Meaning
Low Air (Alarm)		The air pressure to the machine is too low to operate pneumatic systems. The machine will not operate until the condition is corrected. You may need a higher-capacity air compressor.
Low Air (Warning)		The air pressure to the machine is too low to reliably operate pneumatic systems. Correct this condition to prevent damage to or incorrect operation of pneumatic systems.
High Air (Alarm)		The air pressure to the machine is too high to operate pneumatic systems. The machine will not operate until the condition is corrected. You may need to install a regulator at the machine's air input.
E-Stop		**[EMERGENCY STOP]** on the pendant has been pressed. This icon disappears when **[EMERGENCY STOP]** is released.
E-Stop		**[EMERGENCY STOP]** on an auxiliary device has been pressed. This icon disappears when **[EMERGENCY STOP]** is released.
Chamfer Mode		This icon appears when the e-wheel is in chamfer mode.

Name	Icon	Meaning
Single Blk		**SINGLE BLOCK** mode is active. The control executes programs (1) block at a time. Press **[CYCLE START]** to execute the next block.
Tool Life (Warning)		The tool life remaining is below Setting 240, or the current tool is the last one in its tool group.
Tool Life (Alarm)		The tool or tool group has expired, and no replacement tools are available.
Opt Stop	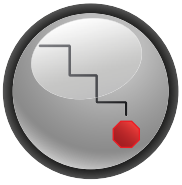	**OPTIONAL STOP** is active. The control stops the program at each M01 command.
Blk Delete		**BLOCK DELETE** is active. The control skips program blocks that begin with a slash (/).
Tool Change		A tool change is in progress.

Name	Icon	Meaning
Probe		The probe system is active.
Parts Catcher		The parts catcher is activated.
Tailstock Hold		The tailstock is engaged with the part.
Conveyor Fwd		The conveyor is active and moving forward.
Conveyor Rev		The conveyor is active and moving in reverse.
HPC		The High-Pressure Coolant system is active.

Name	Icon	Meaning
Air Blast	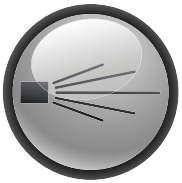	The Air Blast is active.
HIL Light		Indicates the optional High Intensity Lights (HIL) are turned **ON** and the doors are open. Duration is determined by Setting 238.
Coolant		The main coolant system is active.

3.2 More Information Online

For updated and supplemental information, including tips, tricks, maintenance procedures, and more, visit the Haas Service page at www.HaasCNC.com. You can also scan the code below with your mobile device to go directly to the Haas Service page:

Chapter 4: Operation

4.1 Machine Power-On

Before you do this procedure, make sure that possible crash areas, such as the tool probe, parts catcher, tailstock, tool turret, and secondary spindle, are clear.

F4.1: Possible Crash Areas During Power-Up

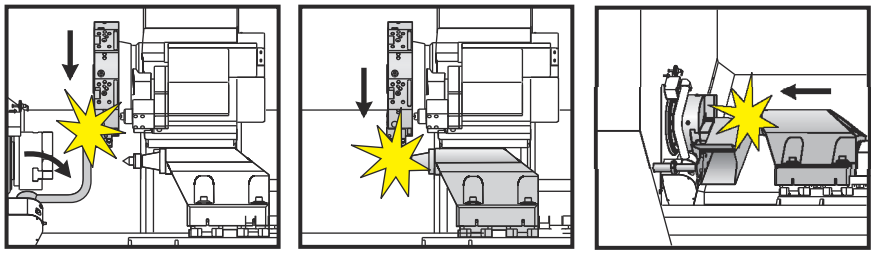

1. Press **[POWER ON]**. After the boot sequence, the display shows the startup screen.

   The startup screen gives basic instructions to start the machine. Press **[CANCEL]** to dismiss the screen.

2. Turn **[EMERGENCY STOP]** to the right to reset it.
3. Press **[RESET]** to clear the startup alarms. If you cannot clear an alarm, the machine may need service. Contact your Haas Factory Outlet (HFO) for assistance.
4. If your machine is enclosed, close the doors.
5. Press **[POWER UP]**.

F4.2: Power Up Box Display

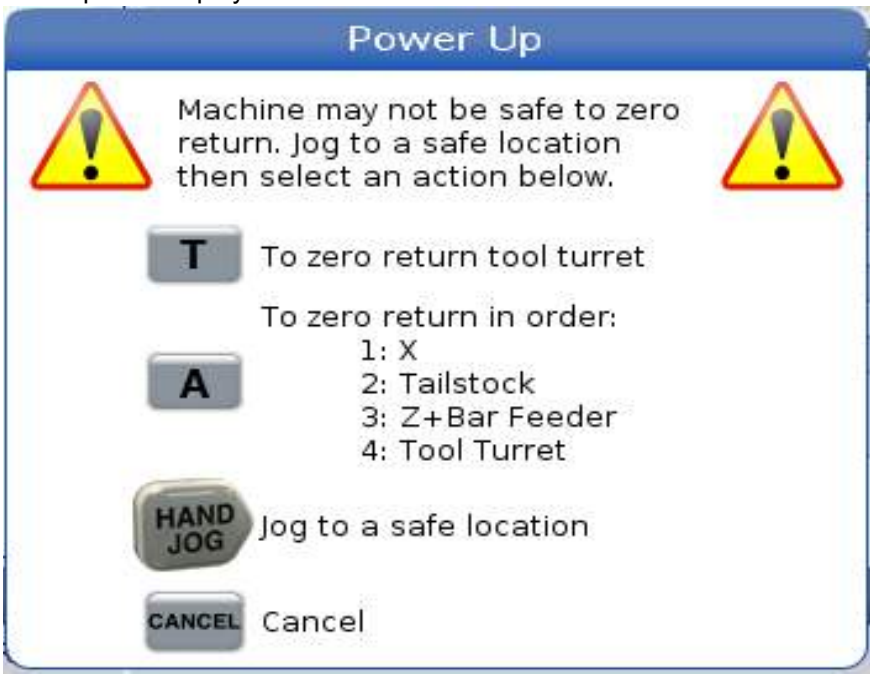

WARNING: *ST-10/15 with sub spindle and live tooling the machine clearances are very tight. To zero return it, do these steps:*

a) Press **[HAND JOG]** to move the turret to a safe location.
b) Press **[T]** to zero return the tool turret.
c) Press **[MDI]** then **[ATC FWD]** or **[ATC REV]** to index the turret so that the short tool faces the spindles.

NOTE: *If you get a message:* `Machine is Not Zeroed!` *make sure that setting 325 Manual Mode Enabled is set to On.*

d) Zero return the other axis. Press the axis letter followed by the **[SINGLE]** button.

The control is now in **`OPERATION:MEM`** mode. You can now press **[CYCLE START]** to run the active program, or you can use other control functions.

4.2 Spindle Warm-Up

If your machine's spindle has been idle for more than (4) days, run the spindle warm-up program before you use the machine. This program brings the spindle up to speed slowly to distribute the lubrication and let the spindle reach a stable temperature.

Your machine includes a 20-minute warm-up program (O09220) in the program list. If you use the spindle at consistent high speeds, you should run this program every day.

4.3 Device Manager ([LIST PROGRAM])

You use the device manager (**[LIST PROGRAM]**) to access, save, and manage data on the CNC control, and on other devices attached to the control. You also use the device manager to load and transfer programs between devices, set your active program, and back up your machine data.

In the tabbed menu at the top of the display, the device manager (**[LIST PROGRAM]**) shows you only the available memory devices. For example, if you do not have a USB memory device connected to the control pendant, the tabbed menu does not show a **USB** tab. For more information on navigating tabbed menus, refer to page **71**.

The device manager (**[LIST PROGRAM]**) shows you the available data in a directory structure. At the root of the CNC control are the available memory devices in a tabbed menu. Each device can contain combinations of directories and files, many levels deep. This is similar to the file structure you find in common personal computer operating systems.

4.3.1 Device Manager Operation

Press **[LIST PROGRAM]** to access the device manager. The initial device manager display shows the available memory devices in a tabbed menu. These devices can include machine memory, the User Data directory, USB memory devices connected to the control, and files available on the connected network. Select a device tab to work with the files on that device.

F4.3: Device Manager Initial Screen Example: [1] Available Device Tabs, [2] Search Box, [3] Function Keys, [4] File Display, [5] File Comments (only available in **`Memory`**).

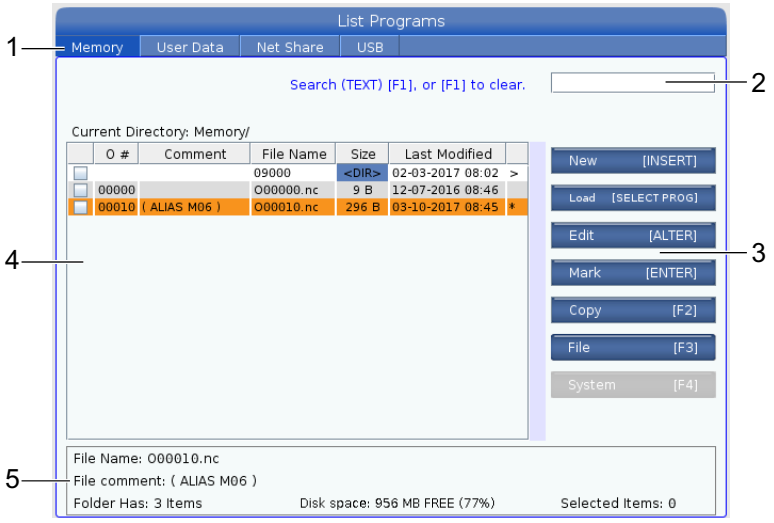

Use the cursor arrow keys to navigate the directory structure:

- Use the **[UP]** and **[DOWN]** cursor arrow keys to highlight and interact with a file or a directory in the current root or directory.
- Roots and directories have a right-hand arrow character (>) in the far-right column of the file display. Use the **[RIGHT]** cursor arrow key to open a highlighted root or directory. The display then shows the contents of that root or directory.
- Use the **[LEFT]** cursor arrow key to return to the previous root or directory. The display then shows the contents of that root or directory
- The CURRENT DIRECTORY message above the file display tells you where you are in the directory structure; for example: *`MEMORY/CUSTOMER 11/NEW PROGRAMS`* shows that you are in the subdirectory **`NEW_PROGRAMS`** inside the directory **`CUSTOMER 11`**, in the root of **`MEMORY`**.

4.3.2 File Display Columns

When you open a root or directory with the **[RIGHT]** cursor arrow key, the file display shows you a list of the files and directories in that directory. Each column in the file display has information about the files or directories in the list.

F4.4: Program/Directory List Example

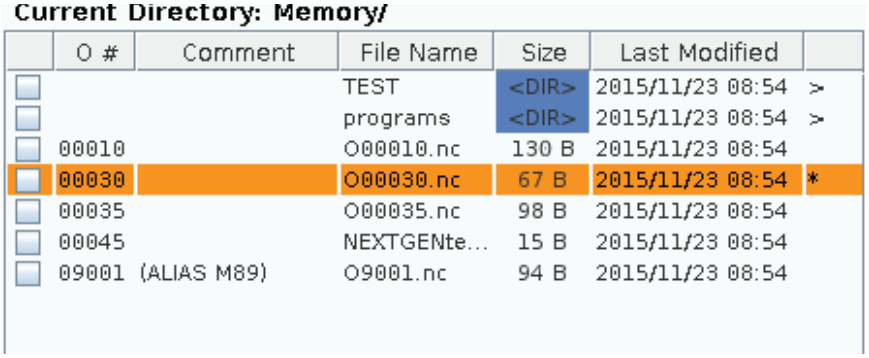

The columns are:

- File selection check box (no label): Press ENTER to toggle a check mark on and off in the box. A check mark in a box indicates that the file or directory selected for operations on multiple files (usually copy or delete).
- Program O Number (**O #**): This column lists the program numbers of the programs in the directory. The letter 'O' is omitted in the column data. Only available in the **Memory** tab.
- File comment (**Comment**): This column lists the optional program comment that appears in the first line of the program. Only available in the **Memory** tab.
- File Name (**File Name**): This is an optional name that the control uses when you copy the file to a memory device other than the control. For example, if you copy program **O00045** to a USB memory device, the filename in the USB directory is **NEXTGENtest.nc**.
- File Size (**Size**): This column shows the amount of storage space that the file takes up. Directories in the list have the designation **<DIR>** in this column.

NOTE: *This column is hidden by default, press the* **[F3]** *button and select* **Show File Details** *to display this column.*

- Date Last Modified (**Last Modified**): This column shows the last date and time when the file was changed. The format is YYYY/MM/DD HR:MIN.

NOTE: *This column is hidden by default, press the* **[F3]** *button and select* **`Show File Details`** *to display this column.*

- Other Information (no label): This column gives you some information about a file's status. The active program has an asterisk (**`*`**) in this column. A letter **`E`** in this column means that the program is in the program editor. A greater-than symbol (**`>`**) indicates a directory. A letter **`S`** indicates that a directory is part of Setting 252 (refer to page **446** for more information). Use the **[RIGHT]** or **[LEFT]** cursor arrow keys to enter or exit the directory.

4.3.3 Create a New Program

Press **[INSERT]** to create a new file in the current directory. The **`CREATE NEW PROGRAM`** popup menu shows on the screen:

F4.5: Create New Program Popup Menu Example: [1] Program O number field, [2] File Name field, [3] File comment field.

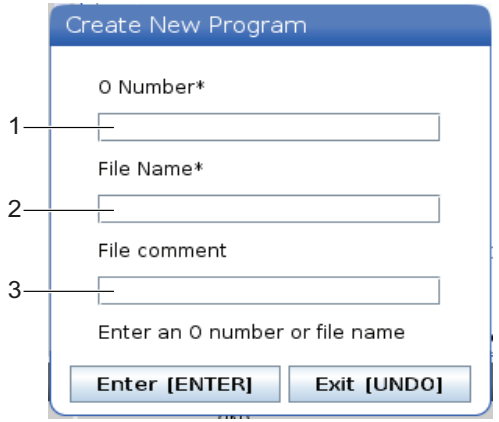

Enter the new program information in the fields. The **`Program O number`** field is required; the **`File Name`** and **`File comment`** are optional. Use the **[UP]** and **[DOWN]** cursors to move between the menu fields.

Press **[UNDO]** at any time to cancel program creation.

- **`Program O number`** (required for files created in Memory): Enter a program number up to (5) digits long. The control adds the letter `O` automatically. If you enter a number shorter than (5) digits, the control adds leading zeros to the program number to make it (5) digits long; for example, if you enter `1`, the control adds zeros to make it *`00001`*.

NOTE: *Do not use O09XXX numbers when you create new programs. Macro programs often use numbers in this block, and overwriting them may cause machine functions to malfunction or stop working.*

- **`File Name`** (optional): Type a filename for the new program. This is the name the control uses when you copy the program to a storage device other than memory.
- **`File comment`** (optional): Type a descriptive program title. This title goes into the program as a comment in the first line with the O number.

Press **[ENTER]** to save your new program. If you specified an O number that exists in the current directory, the control gives the message *`File with O Number nnnnn already exists. Do you want to replace it?`* Press **[ENTER]** to save the program and overwrite the existing program, press **[CANCEL]** to return to the program name popup, or press **[UNDO]** to cancel.

4.3.4 Create A Container

The control has the ability to group files together and create a zip file, you can also unzip the files.

To zip the files:

1. Press **[LIST PROGRAM]**.
2. Navigate and highlight a.nc file.
3. Press **[SELECT PROGRAM]**.
4. Press **[F3]** and select Create Container.
5. Select the programs you will like to zip.

NOTE: *You can press* **[ALTER]** *to change the save location.*

NOTE: *Any files that the control cannot find will be marked in red and must be unchecked from the container before it can package the files.*

6. Press **[F4]** to start packing.

To unzip the files:

1. Select the ***.hc.zip** file and press **[F3]**.
2. Press **[F4]** to extract the files.

NOTE: *When unzipping the control will overwrite existing files and they will be highlighted in red. If you don't want to overwrite existing files make sure you unchecked the file before extracting.*

4.3.5 Select the Active Program

Highlight a program in the memory directory, then press **[SELECT PROGRAM]** to make the highlighted program active.

The active program has an asterisk (*****) in the far-right column in the file display. It is the program that runs when you press **[CYCLE START]** in **OPERATION:MEM** mode. The program is also protected from deletion while it is active.

4.3.6 Check Mark Selection

The check box column on the far left of the file display lets you select multiple files.

Press **[ENTER]** to place a check mark in a file's check box. Highlight another file and press **[ENTER]** again to put a check mark in that file's check box. Repeat this process until you have selected all of the files you want to select.

You can then do an operation (usually copy or delete) on all of those files at the same time. Each file that is part of your selection has a check mark in the check box. When you choose an operation, the control does that operation on all of the files with check marks.

For example, if you want to copy a set of files from the machine memory to a USB memory device, you would put a check mark on all of the files that you want to copy, then press **[F2]** to start the copy operation.

To delete a set of files, put a check mark on all of files you want to delete, then press **[DELETE]** to start the delete operation.

NOTE: *A check-mark selection only marks the file for further operation; it does not make the program active.*

NOTE: *If you have not selected multiple files with check marks, the control does operations only on the currently highlighted directory or file. If you have selected files, the control does operations only on the selected files and not on the highlighted file, unless it is also selected.*

4.3.7 Copy Programs

This function lets you copy programs to a device or a different directory.

1. To copy a single program, highlight it in the device manager program list and press **[ENTER]** to assign a check mark. To copy multiple programs, check-mark all the programs you want to copy.
2. Press **[F2]** to start the copy operation.

   The Select Device popup appears.

F4.6: Select Device

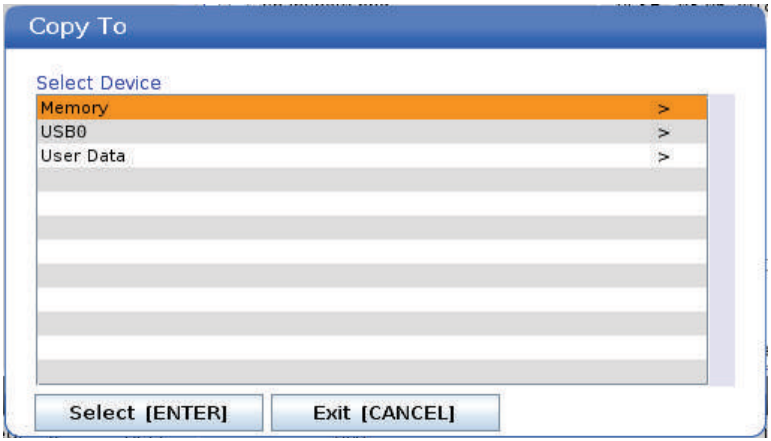

3. Use the cursor arrow keys to select the destination directory. **[RIGHT]** cursor to enter the chosen directory.

   The **`Insert Directory:`** Copy popup menu appears.

F4.7: Copy Popup Menu Example

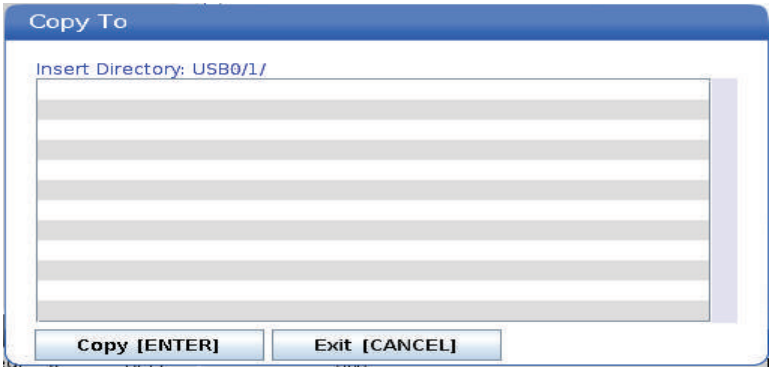

4. Press **[ENTER]** to complete the copy operation, or press **[CANCEL]** to return to the device manager.

4.3.8 Edit a Program

Highlight a program, and then press **[ALTER]** to move the program into the program editor.

The program has the designation **`E`** in the far-right column of the file display list when it is in the editor, unless it is also the active program.

You can use this function to edit a program while the active program runs. You can edit the active program, but your changes do not take effect until you save the program and then select it again in the device manager menu.

4.3.9 File Commands

Press **[F3]** to access the file commands menu in the device manager. The list of options appears under the **File [F3]** drop-down menu in the device manager. Use the cursor arrow keys or the jog handle to highlight a command, and then press **[ENTER]**.

F4.8: The File Commands Menu

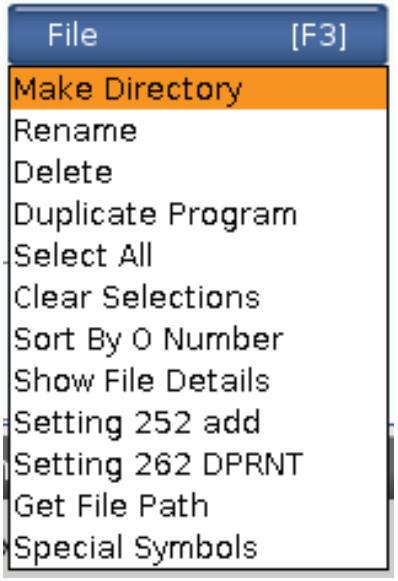

- **Make Directory**: creates a new subdirectory in the current directory. Type a name for the new directory, and then press **[ENTER]**.
- **Rename**: changes the name of a program. The **Rename** popup menu has the same options as the new program menu (File Name, O Number, and File Title).
- **Delete**: deletes files and directories. When you confirm the operation, the control deletes the highlighted file, or all of the files with check-mark selection.
- **Duplicate Program**: makes a copy of a file in the current location. The **Save As** popup menu asks you to specify a new program name before you can complete this operation.
- **Select All**: adds check-marks to all of the files/directories in the **Current Directory**.
- **Clear Selections**: removes check-marks from all of the files/directories in the **Current Directory**.
- **Sort By O Number**: sorts the program list by O number. Use this menu item again to sort by filename. By default, the program list is sorted by filename. Only available in the **Memory** tab.

- **`Setting 252 add / Setting 252 remove`**: adds or removes a custom sub-program search location to the list of locations. See Setting Up Search Locations section for more information.
- **`Setting 262 DPRNT`**: adds a custom destination file path for DPRNT.
- **`Get File Path`**: places the path and the name of the selected file in parenthesis on the input bar.
- **`Special Symbols`**: accesses text symbols that are not available on the keyboard. Enter the number of the character you want to use to put it in the input bar. The special characters are: `_ ^ ~ { } \ < >`

4.4 Screen Capture

The control can capture and save an image of the current screen to an attached USB device or the User Data memory.

1. Enter a filename if desired. If no filename is entered, the system will use the default filename (see note).
2. Press **[SHIFT]**.
3. Press **[F1]**.

NOTE: *The control uses the default filename* **`snapshot#.png`**. *The* **`#`** *starts from 0 and increments each time you capture a screen. This counter resets at power off. Screen captures that you take after a power cycle overwrite previous screen captures that have the same filename on the User Data memory.*

The control saves the screen capture to your USB device or control memory. The message *`Snapshot saved to USB`* or *`Snapshot saved to User Data`* appears when the process finishes.

4.5 Error Report

The control can generate an error report that saves the state of the machine that is used for analysis. This is useful when helping the HFO troubleshoot an intermittent problem.

1. Press **[SHIFT]**.
2. Press **[F3]**.

NOTE: *Be sure to always generate the error report with the alarm or the error is active.*

The control saves the error report to your USB device or control memory.The error report is a zip file that includes a screen capture, the active program, and other information used for diagnostics. Generate this error report when an error or an alarm occurs. E-mail the error report to your local Haas Factory Outlet.

4.6 Full Machine Backup

The backup function makes a copy of your machine's settings, programs, and other data so that you can easily restore them.

You create and load backup files with the **`System [F4]`** drop-down menu.

F4.9: `[F4]` Menu Selections

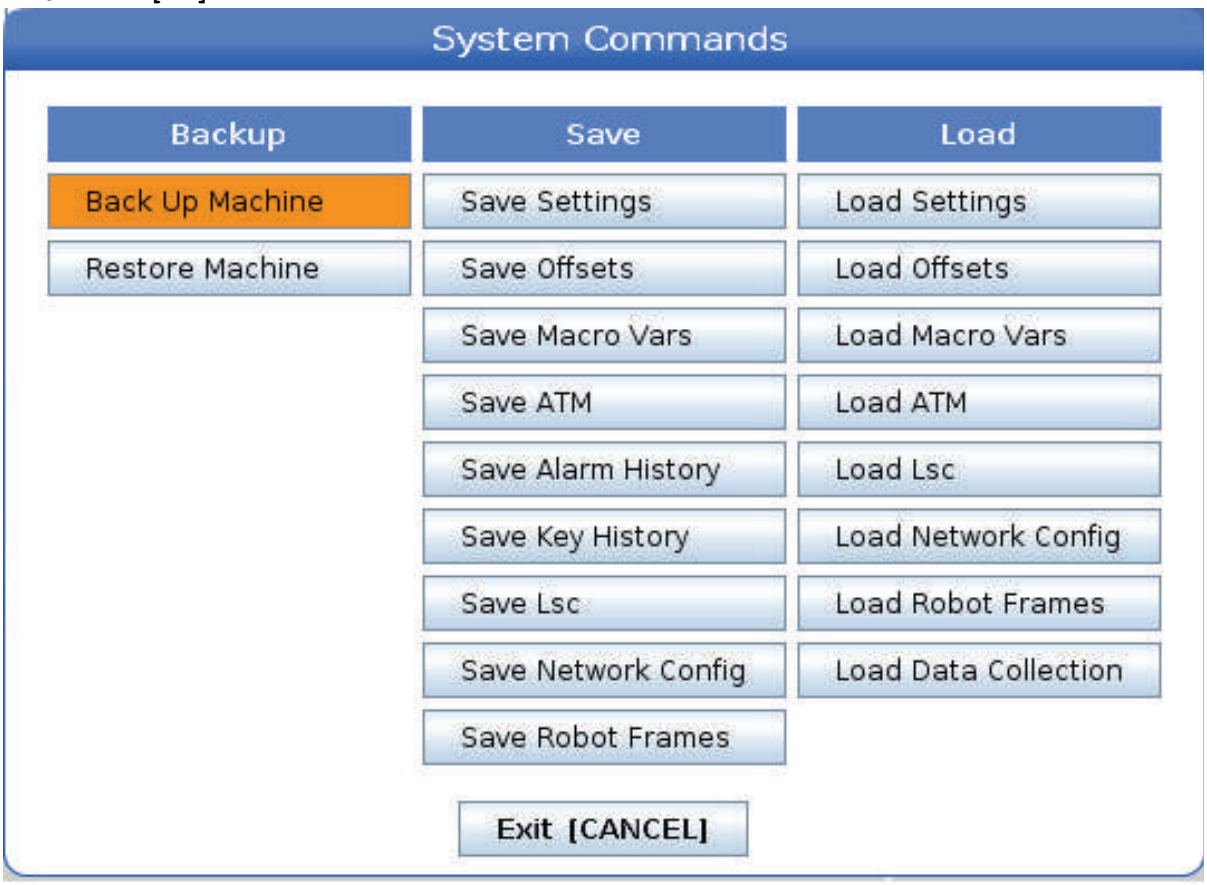

To create a full machine backup:

1. Press **[LIST PROGRAM]**.
2. Navigate to the **`USB`** or **`Network Device`**.
3. Press **[F4]**.
4. Select **`Backup Machine`** and press **[ENTER]**.

Backup Machine Pop-up Menu

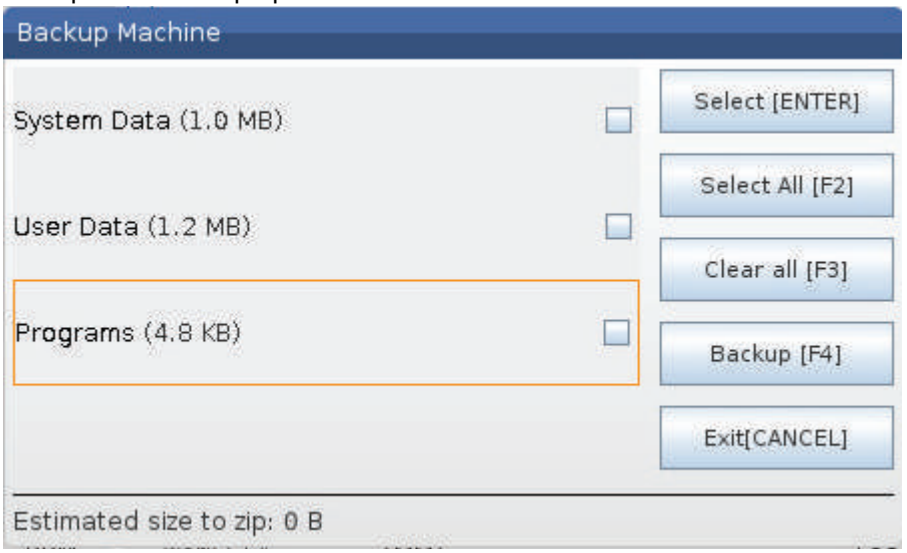

5. Highlight the data to back up and press **[ENTER]** to apply a check mark. Press **[F2]** to select all data. Press **[F3]** to clear all check marks.

6. Press **[F4]**.

   The control saves the backup you selected in a zip file labeled **`HaasBackup(mm-dd-yyyy).zip`** where mm is the month, dd is the day, and yyyy is the year.

T4.1: Default File Names in the Zip File

Selected Backup	Data Saved	Name of File (Folder)
System Data	Settings	(Serial Number)
System Data	Offsets	OFFSETS.OFS
System Data	Alarm History	AlarmHistory.txt
System Data	Advanced Tool Management (ATM)	ATM.ATM
System Data	Key History	KeyHistory.HIS
Programs	Memory Files and Folders	(Memory)
User Data	User Data Files and Folders	(User Data)

4.6.1 Selected Machine Data Backup

To back up selected information from your machine:

1. If a USB is used, insert a USB memory device into the **[USB]** port on the right side of the control pendant. If **`Net Share`** is used, make sure **`Net Share`** is correctly set up.
2. Using the **[LEFT]** and **[RIGHT]** cursors navigate to **`USB`** in the Device Manager.
3. Open the destination directory. If you want to create a new directory for your backup data, refer to page **106** for instructions.
4. Press **[F4]**.
5. Select the menu option for the data you want to back up, and press **[ENTER]**.
6. Type a filename in the **`Save As`** pop-up menu. Press **[ENTER]**. The message *SAVED* is displayed after saving is complete. If the name exists you can overwrite or type a new name.

   The file types for backups are listed in the following table.

T4.2: Menu Selection and File Name for Backup

F4 Menu Selection	Save	Load	Created File
Settings	yes	yes	USB0/serialnumber/CONFIGURATION/ serialnumber_us.xml
Offsets	yes	yes	filename.OFS
Macro Vars	yes	yes	filename.VAR
ATM	yes	yes	filename.ATM
Lsc	yes	yes	filename.LSC
Network Config	yes	yes	filename.xml
Alarm History	yes	no	filename.txt
Key History	yes	no	filename.HIS

NOTE: *When you back up settings, the Control does not prompt for a file name. It saves the file in a subdirectory:*

- USB0/machine serial number/CONFIGURATION/machine serial number_us.xml

4.6.2 Restoring a Full Machine Backup

This procedure tells you how to restore your machine data from the backup on a USB memory device.

1. Insert the USB memory device with the backup files into the USB port on the right side of the control pendant.
2. Navigate to **USB** in the Device Manager.
3. Press **[EMERGENCY STOP]**.
4. Open the directory that contains the backup you want to restore.
5. Highlight the HaasBackup zip file to load.
6. Press **[F4]**.
7. Select **Restore Machine** and press **[ENTER]**.

   The Restore Machine pop-up window shows what types of data can be selected to restore.

F4.10: **Restore Machine** Pop-up menu (example shows an all data backup)

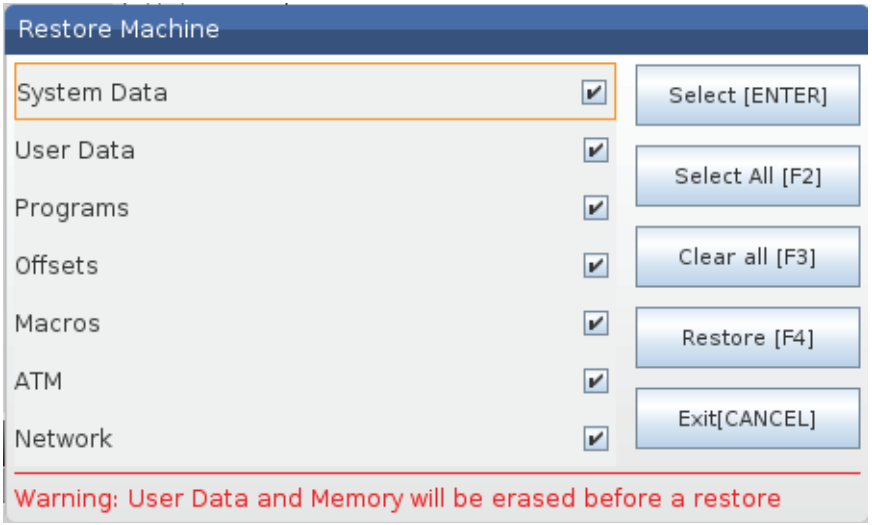

8. Highlight the data to restore and press **[ENTER]** to apply a check mark. Press **[F2]** to select all data. Press **[F3]** to clear all selectors.

NOTE: *A restore can be stopped at any time by pressing* **[CANCEL]** *or* **[RESET]** *except when restoring* **`System Data`**.

WARNING: *User data and memory are erased prior to a restore.*

9. Press F4.

   Each data area restored is checked-off and initialized.

4.7 Running Programs

Once a program is loaded on the machine and the offsets are set, to run the program:

1. Press **[CYCLE START]**.
2. It is suggested that you run the program in Graphics mode before doing any cutting.

4.8 Locate the Last Program Error

Starting in software version 100.19.000.1100 the control can find the last error in a program. Press **[SHIFT]** + **[F4]** to display the last line of G-code that generated the error.

F4.11: Press **[SHIFT]** + **[F4]** [1] to display the last G-code error [2].

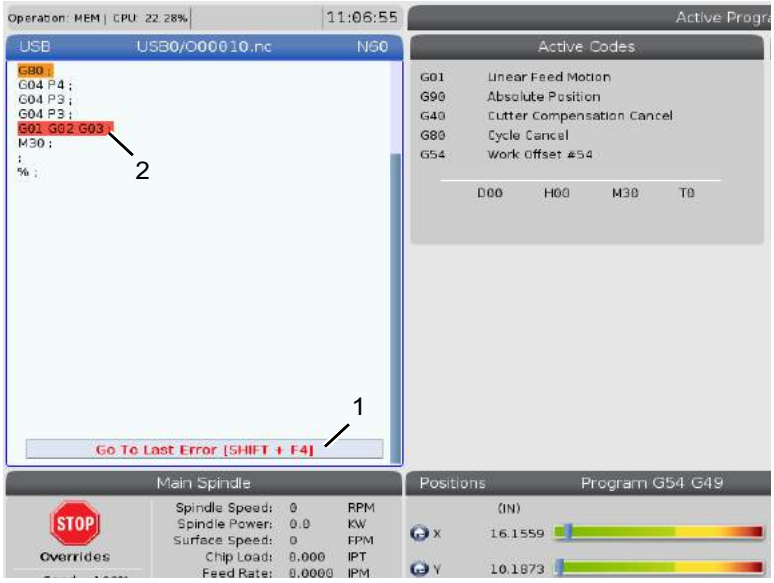

4.9 Safe Run Mode

The purpose of Safe Run is to reduce damage to the machine in the event of a crash. It does not prevent crashes, but it raises an alarm sooner and backs off from the crash location.

NOTE: *The Safe Run feature is available starting in software version 100.19.000.1300.*

Safe Run Supported Machines

- VF-1 through VF-5
- VM-2/3
- UMC-500/750/1000
- All DM's
- All DT's
- All TM's
- ST-10 through ST-35

Common causes for crashes are:

- Incorrect tool offsets.
- Incorrect work offsets.
- Wrong tool in the spindle.

NOTE: *The Safe Run feature will only detect a crash in handle jog and rapid (G00), it will not detect a crash in a feed move.*

Safe Run does the following:

- Slow down the speed of the motion.
- Increases the position error sensitivity.
- When a crash is detected, the control will immediately reverse the axis by a small amount. This will prevent the motor from continuing to drive into the object it has crashed into as well as relieve pressure from the crash itself. After Safe Run has detected a crash, you should be able to easily fit a piece off paper between the two surfaces that crashed.

NOTE: *Safe Run is intended for running a program for the first time after writing or changing it. Is it not recommended to run a reliable program with Safe Run, as it increases cycle time significantly. The tool may break and the work piece may still be damaged in a crash.*

Safe Run is active during jogging as well. Safe Run can be used during job setup to protect against accidental crashes due to operator error.

F4.12: Safe Run Mode

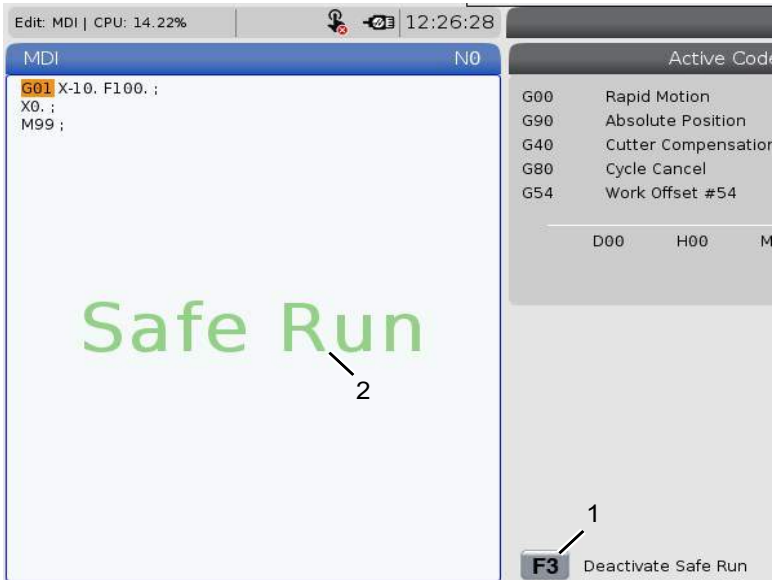

If your machine supports Safe Run, you will see a new icon in MDI with the text *F3 Activate Safe Run* [1]. Press **[F3]** to turn Safe Run on/off. Safe Run Active state is noted by a water mark [2] in the program panel.

It is only active during rapid motions. Rapid motions include G00, **[HOME G28]**, moving to tool changes, and the non-machining motions of canned cycles. Any machining motion such as a feed or tap will not have safe mode active.

Safe Run is not active during feeds due to the nature of crash detection. Cutting forces cannot be discerned from crashes.

F4.13: Safe Run Mode

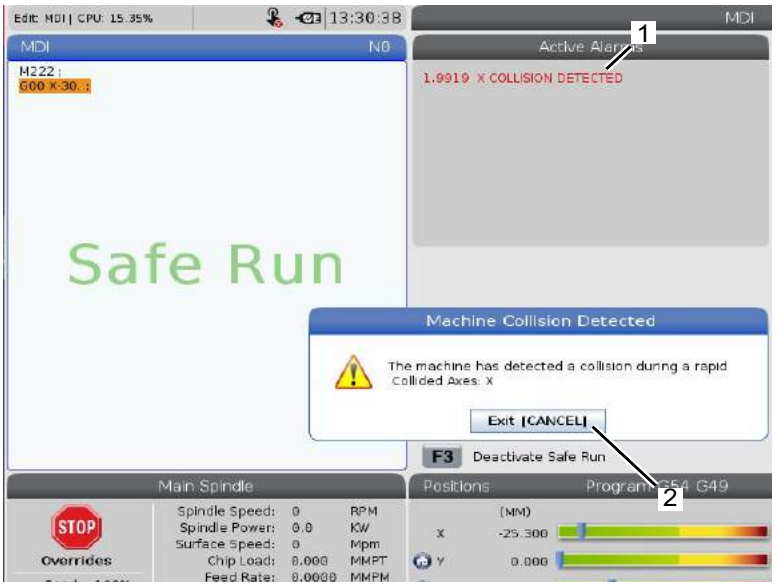

When a crash is detected, all motion is brought to a stop, an alarm [1] is thrown, and a popup [2] is generated letting the operator know that a crash was detected, and which axis it was detected on. This alarm can be cleared by **[RESET]**.

In certain cases the pressure against the part may not have been relieved by the Safe Run back-off. In the worse case, an additional crash may be generated after you have reset the alarm. If this happens, turn Safe Run off and jog the axis away from the crash location.

4.10 RJH-Touch Overview

The Remote Jog Handle (RJH-Touch) is an optional accessory that gives you hand-held access to the control for faster and easier setups.

Your machine must have Next Generation Control software 100.19.000.1102 or higher to use all the RJH-Touch functions. The next sections explain how to operate the RJH-Touch.

F4.14: Remote Jog Handle [1] Cycle Start Key, [2] Feed Hold Key, [3] Function Keys, [4] Rapid Jog Key, [5] Jog Direction Keys, [6] Touch Screen, [7] Holster, [8] Function Tabs, [9] Handle Jog Wheel.

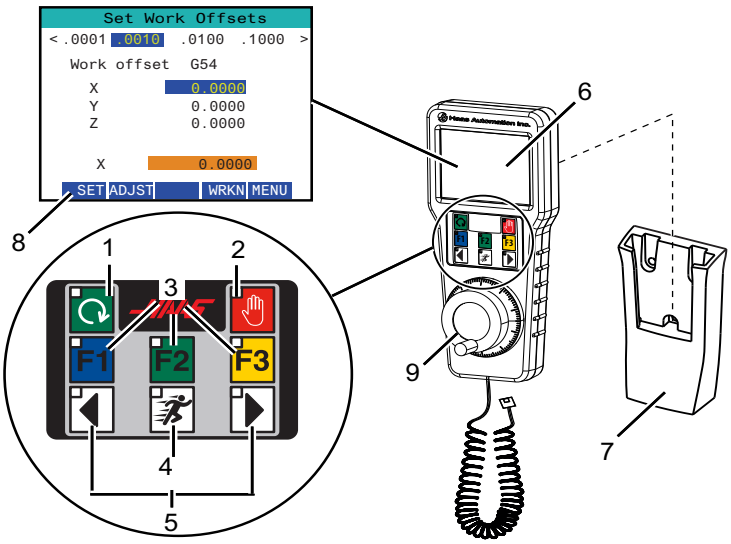

This illustration shows these components:

1. Cycle Start. Has the same function as **[CYCLE START]** on the control pendant.
2. Feed Hold. Has the same function as **[FEED HOLD]** on the control pendant.
3. Function Keys. These keys are for future use.
4. Rapid Jog button. This key doubles the jogging speed when pressed simultaneously with one of the jog direction buttons.
5. Jog Direction Keys. These keys work the same as keypad jog arrow keys. You can press and hold to jog the axis.
6. LCD Touch Screen Display.
7. Holster. To activate the RJH, lift it out of the holster. To deactivate the RJH, put it back into the holster.
8. Function Tabs. These tabs have different functions in different modes. Press the function tab that corresponds to the function you want to use.
9. Handle Jog Wheel. This Handle Jog works like the jog handle on the control pendant. Each click of the handle jog moves the selected axis one unit of the selected jog rate.

Most RJH functions are available in Handle Jog mode. In other modes, the RJH screen displays information about the active or MDI program.

4.10.1 RJH-Touch Operation Mode Menu

The operation mode menu lets you quickly select the RJH mode. When you select a mode on the RJH, the control pendant also changes to that mode.

Press the **[MENU]** function key in most RJH modes to access this menu.

F4.15: RJH-Touch Operation Mode Menu Example

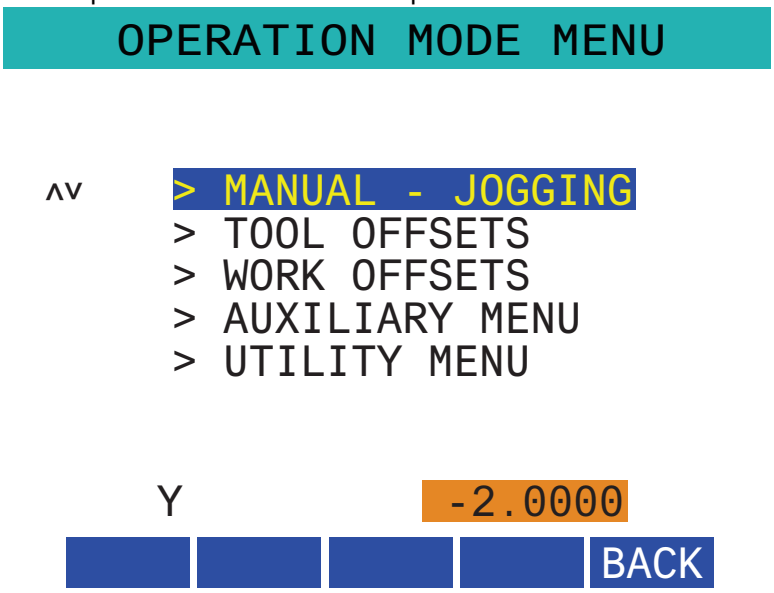

The menu options are:

- **MANUAL - JOGGING** puts the RJH and the machine control in **HANDLE JOG** mode.
- **TOOL OFFSETS** puts the RJH and the machine control in **TOOL OFFSET** mode.
- **WORK OFFSETS** puts the RJH and the machine control in **WORK OFFSETS** mode.
- **AUXILIARY MENU** brings up the Auxiliary Menu for the RJH.

NOTE: *The flash light feature is not available with the RJH-Touch.*

- **UTILITY MENU** brings up the Utility Menu for the RJH. This menu contains only diagnostic information.

4.10.2 RJH-Touch Manual Jogging

The manual jogging screen on the RJH allows you to select the axis and jog rate.

F4.16: RJH-Touch Manual Jogging Example.

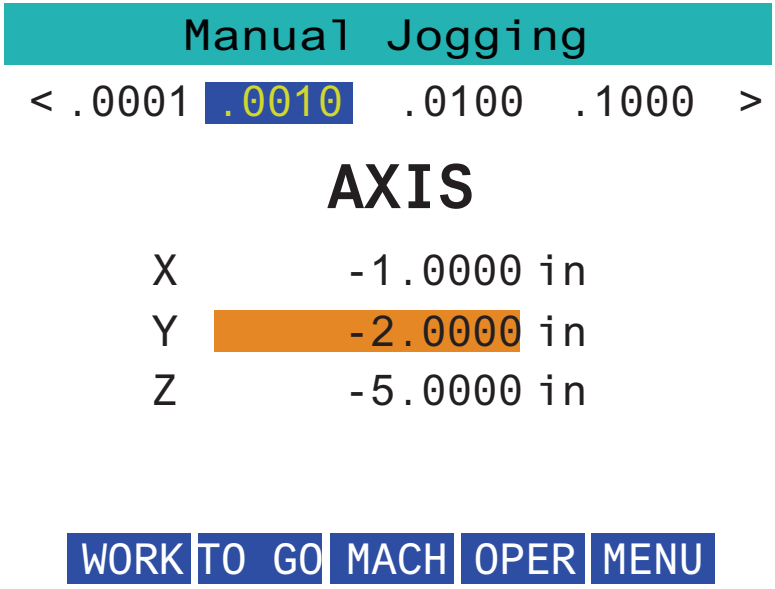

- Press **[MENU]** on the screen.
- Press **`Manual Jogging`** on the screen.
- Press the `.0001`, `.0010`, `.0100`, or `.1000` on the screen to change the jog rate.
- Press the axis position on the screen or press **[F1]**/ **[F3]** on the RJH to change the axis.
- Turn the handle jog wheel to jog the axis.
- Press **[WORK]** on the screen to show the Program positions.
- Press **[TO GO]** on the screen to show the Distance to go positions.
- Press **[MACH]** on the screen to show the Machine position.
- Press **[OPER]** on the screen to display the Operator position.

4.10.3 Tool Offsets with RJH-Touch

This section describes the controls you use on the RJH to set tool offsets.

For more information about the process of setting tool offsets, refer to page **128**.

To access this function on the RJH, press **[OFFSET]** on the control pendant and select the **`Tool Offsets`** page, or select **`TOOL OFFSETS`** from the RJH operation mode menu (refer to page **118**).

F4.17: RJH Tool Offsets Screen Example

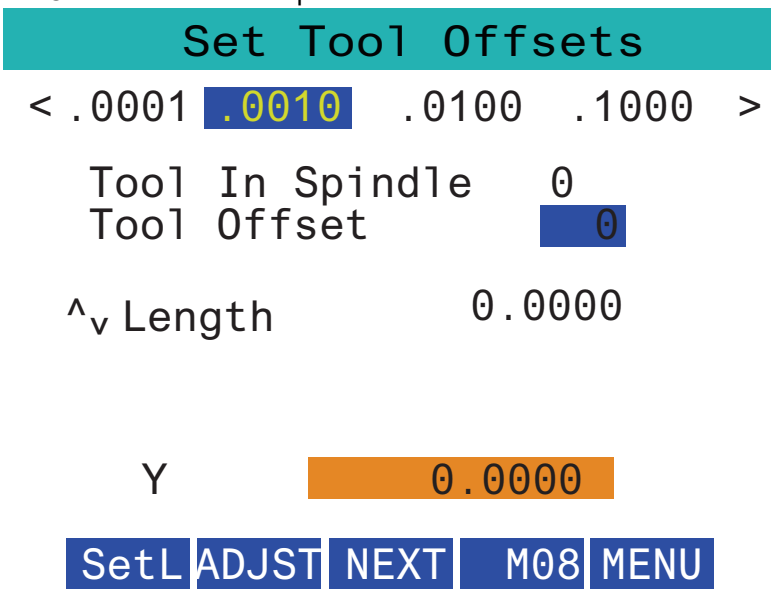

- Press the `.0001`, `.0010`, `.0100`, or `.1000` on the screen to change the jog rate.
- Press the axis position on the screen or press **[F1]**/ **[F3]** on the RJH to change the axis.
- Press the **[NEXT]** on the screen to change to the next tool.
- To change the tool offset, highlight the **`TOOL OFFSET`** field and use the handle to change the value.
- Use the jog handle to jog the tool to the desired position. Press the **[SETL]** function key to record the tool length.
- To adjust the tool length, for example, if you want to subtract from the tool length the thickness of the paper you used to touch off the tool:

  a) Press the **[ADJST]** button on the screen.
  b) Use the handle jog to change the value (positive or negative) to add to the tool length.
  c) Press the **[ENTER]** button on the screen.
- If your machine has the Programmable Coolant option, you can adjust the spigot position for the tool. Highlight the **`COOLANT POS`** field and use the handle jog to change the value. You can use the **[M08]** button on the screen to turn on the coolant and test the spigot position. Press the button on the screen again to turn off the coolant.

4.10.4 Work Offsets with the RJH-Touch

This section describes the controls you use on the RJH-Touch to set work offsets.

For more information about the process of setting work offsets, refer to page **130**

To access this function on the RJH-Touch, press **[OFFSET]** on the control pendant and select the **Work Offsets** page, or select **WORK OFFSETS** from the RJH operation mode menu (refer to page **118**).

F4.18: RJH Work Offsets Screen Example

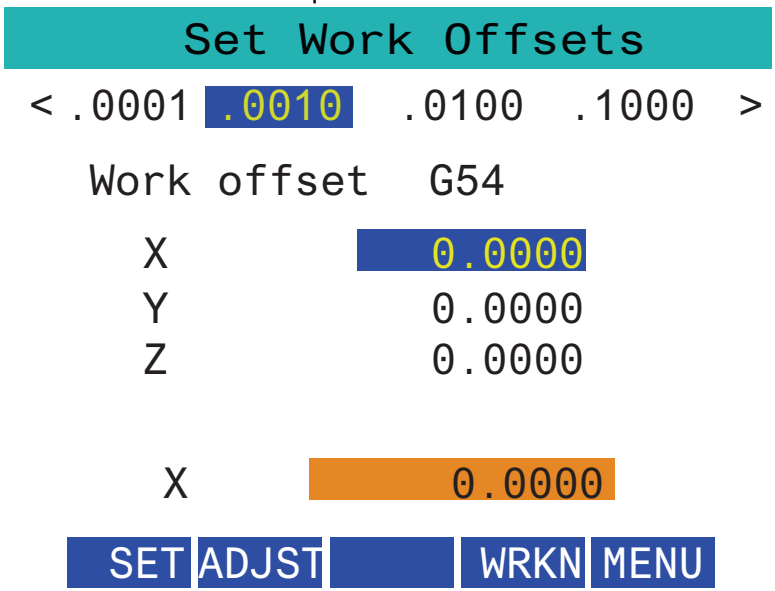

- Press the **.0001**, **.0010**, **.0100**, or **.1000** on the screen to change the jog rate.
- Press the axis position on the screen or press **[F1]**/ **[F3]** on the RJH to change the axis.
- To change the work offset number, press the **[WORKN]** button on the screen and use the handle jog knob to select a new offset number. Press the **[ENTER]** button on the screen to set the new offset.
- To move the axes use the handle jog wheel.
- When you reach the offset position in an axis, press the **[SET]** button on the screen to record the offset position.
- To adjust an offset value:

  a) Press the **[ADJST]** function key.

  b) Use the pulse knob to change the value (positive or negative) to add to the offset.

  c) Press the **[ENTER]** function key.

4.11 Part Setup

Correct workholding is very important for safety, and to get the machining results that you want. There are many workholding options for different applications. Contact your HFO or workholding dealer for guidance.

4.11.1 Jog Mode

Jog Mode allows you to jog each of the axes to a desired location. Before jogging the axes it is necessary to home (beginning axes reference point) the axes.

To enter jog mode:

1. Press **[HANDLE JOG]**.
2. Pick an increment speed to be used while in jog mode (**[.0001]**, **[.001]**, **[.01]** or **[.1]**).
3. Press the desired axis (**[+X]**, **[-X]**, **[+Z]**, or **[-Z]**) and either press and hold these axis jog keys or use the **[HANDLE JOG]** control to move the selected axis.

4.11.2 Tool Offsets

Press the **[OFFSET]** button to view the tool offset values. The tool offsets can be entered manually or automatically with a probe. The list below shows how each offset setting works.

F4.19: Tool Offsets Display

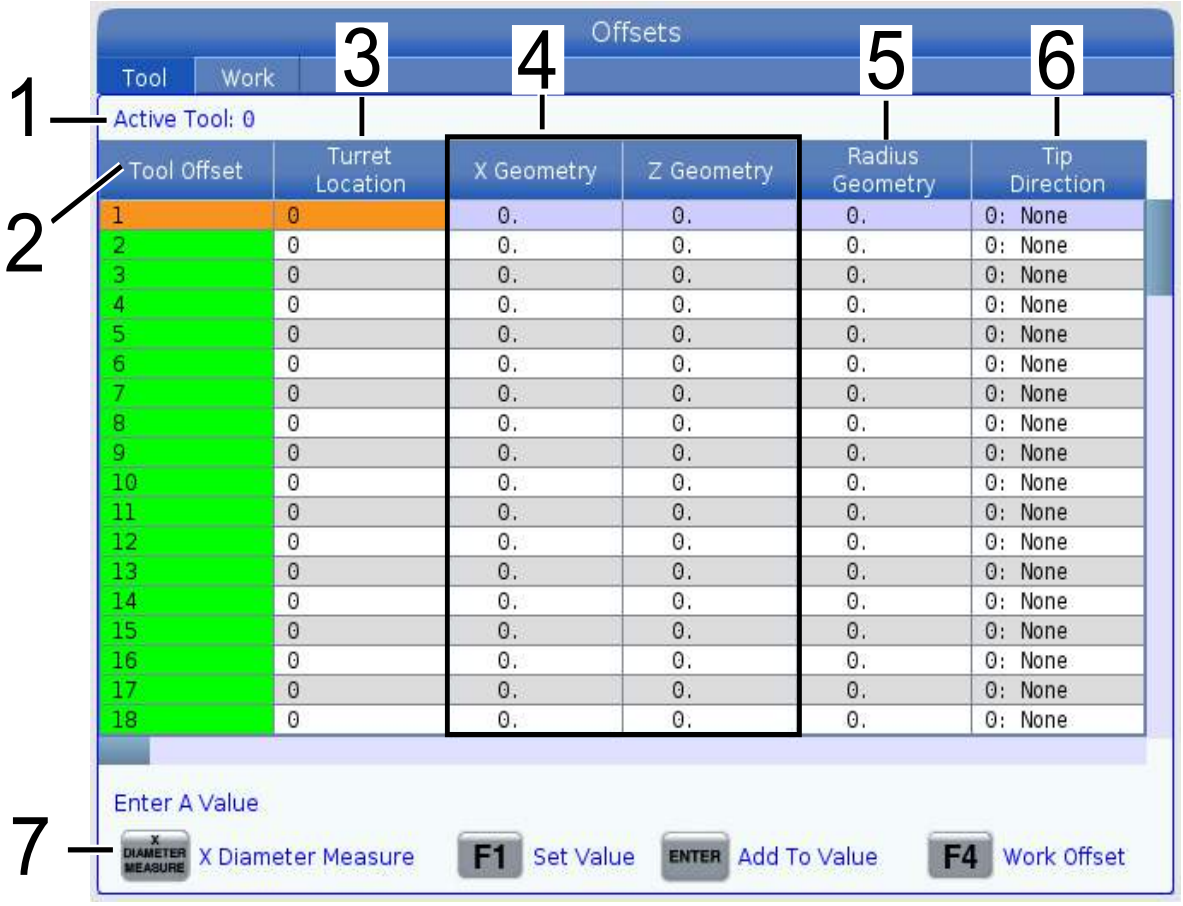

1. Active Tool: - This tells you which position is active turret.
2. Tool Offset (T) - This is the list of available tool offsets. There is a maximum of 99 tool offsets available.
3. Turret Location- This column is used to help the operator remember which tool is on the turret station. This is useful when you have a tool holder that has tools mounted on the front and on the back. You want to remember what offset each of the tools is using and where it is located.
4. X and Z Geometry - Each offset contains values for the distance from machine zero to the tip.

5. Radius Geometry - This offset is used to compensate for the radius on the tool tip when cutter compensation is used. Check the radius specification on the tool inserts and enter the value on this offset.
6. Tip Direction - Use this to set the direction of the tool tip when cutter compensation is used. Press **[F1]** to view the options.
7. These functions buttons allow you to set the offset values. Pressing **[F1]** enters the number in the selected column. Entering a value and pressing **[ENTER]** adds the amount entered to the number in the selected column.

F4.20: Tool Offsets Display Continued. Press the **[RIGHT]** arrow key to display this page.

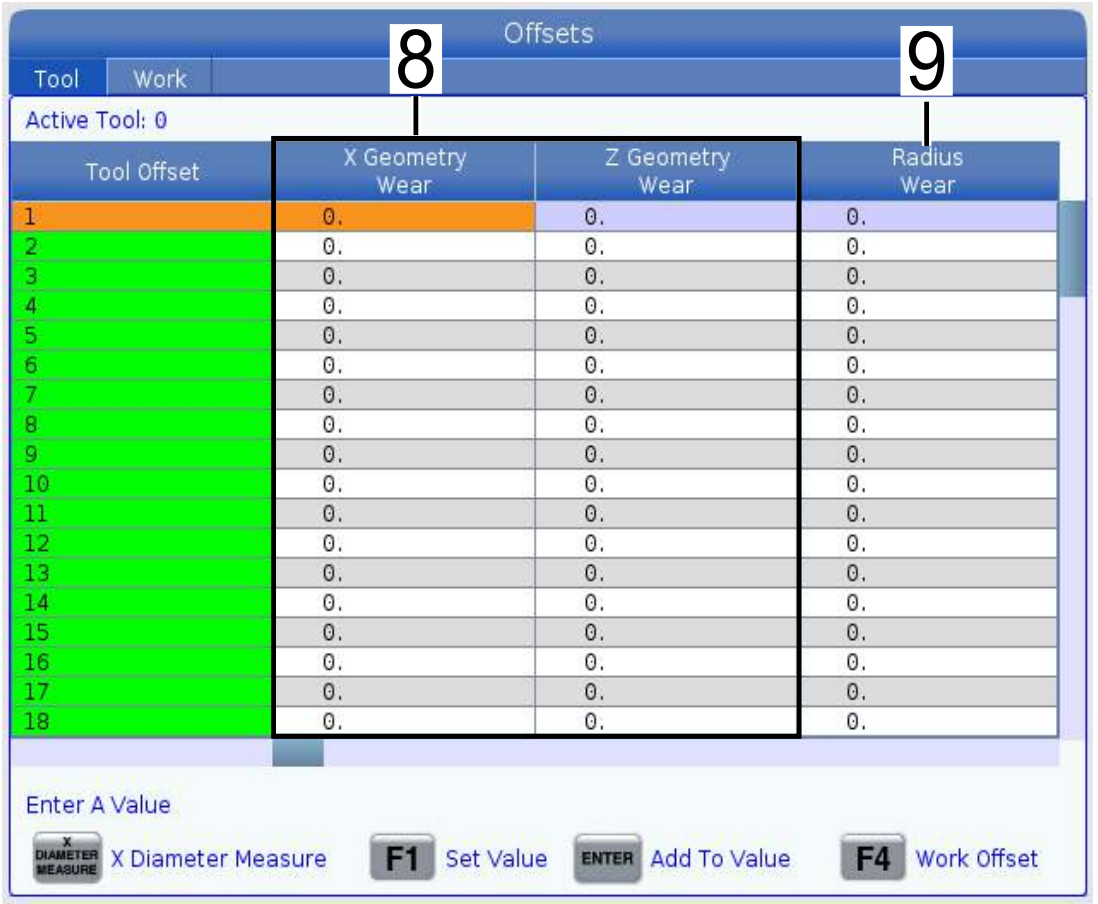

8. X and Z Wear Geometry - The values entered here are intended for minute adjustments to offset that are required to compensate for normal wear during the course of a job.
9. Radius Wear - The values entered here are intended for minute adjustments to offset that are required to compensate for normal wear during the course of a job.

F4.21: Tool Offsets Display Continued. Press the **[RIGHT]** arrow key to display this page.

10. Tool Type - This column is used by the control to decide which probe cycle to use to probe this tool. Press **[F1]** to view the options.

11. Tool Material - This column is used for calculations by the VPS feeds and speeds library. Press **[F1]** to view the options.

F4.22: Tool Offsets Display Continued. Press the **[RIGHT]** arrow key to display this page.

12. Live Tool Radius - This offset is used to compensate for the radius on the live tool tip. Check the radius specification on the tool inserts and enter the value on this offset.
13. Live Tool Wear - The values entered here are intended for minute adjustments to offset that are required to compensate for normal wear during the course of a job.
14. Flutes - When this column is set to the correct value, the control can calculate the correct Chip Load value displayed at the Main Spindle screen. The VPS feeds and speeds library will also use these values for calculations.

NOTE: *The values set on the Flute column will not affect the operation of the probe.*

15. Actual Diameter - This column is used by the control to calculate the correct Surface Speed value displayed at the Main Spindle screen.

F4.23: Tool Offsets Display Continued. Press the **[RIGHT]** arrow key to display this page.

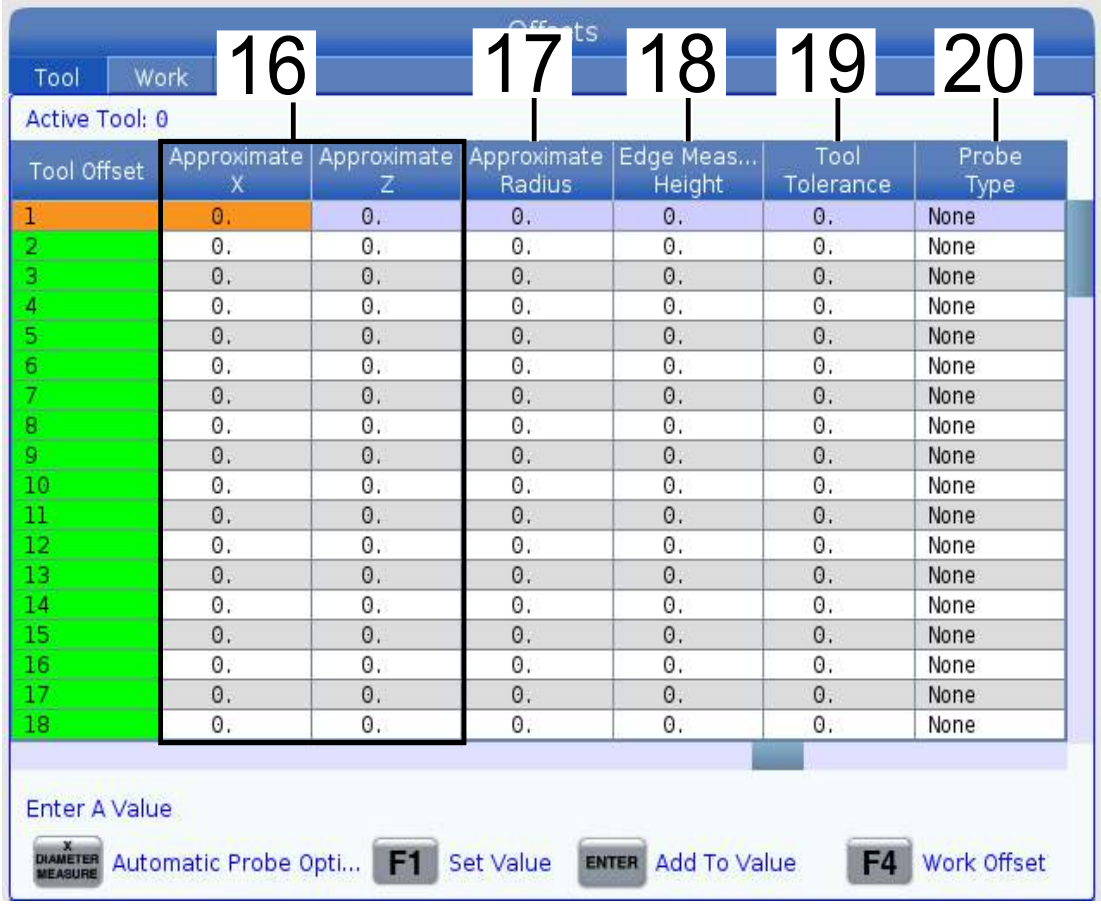

16. Approximate X and Z - This column is used by the ATP or Tool Setting Probe. The value in this field tells the probe the approximate position of the tool being probed.
17. Approximate Radius - This column is used by the ATP probe. The value in the field tells the probe the approximate radius of the tool.
18. Edge Measure Height - This column is used by the ATP probe. The value in this field is the distance below the tip of the tool that the tool needs to move, when the edge is probed. Use this setting when you have a tool with a large radius or when you are probing a diameter on a chamfer tool.
19. Tool Tolerance - This column is used by the probe. The value in this field is used for checking tool breakage and wear detection. Leave this field blank if you are setting the length and diameter on the tool.
20. Probe Type - This column is used by the probe. You can select the probe routine you want to perform on this tool. Press **[X DIAMETER MEASURE]** to view the options.

4.11.3 Setting the Tool Offset

The next step is to touch off the tools. Doing this defines the distance from the tip of the tool to the side of the part. This procedure requires the following:

- An O.D. Turning Tool
- A work piece that fits in the chuck jaws
- A measuring tool to inspect the workpiece diameter

For information on setting up Live tools, refer to page **233**.

F4.24: Lathe Tool Offset

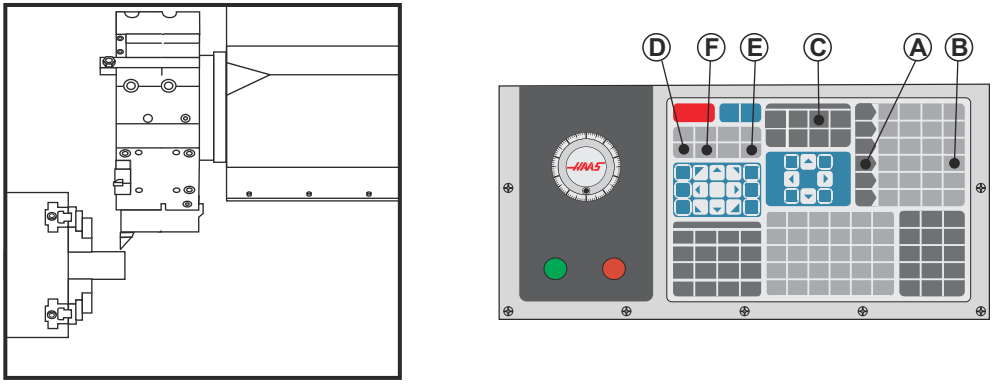

1. Press **[OFFSET]**. Press **[HANDLE JOG]**.
2. Load an O.D. turning tool into the tool turret. Press **[NEXT TOOL]** [F] until it is the current tool.
3. Clamp the workpiece in the spindle.
4. Press **[.1/100]** [B]. The axis selected moves at a fast rate when the handle is turned.
5. Close the lathe door. Type `50` and press **[FWD]** for the spindle to start.
6. Use the turning tool loaded in station 1 to make a small cut on the diameter of the material clamped in the spindle. Approach the part carefully and feed slowly during the cut.
7. After the small cut is done, jog away from the part using Z-Axis. Move far enough away from the part so that you can take a measurement with your measuring tool.
8. Press Spindle **[STOP]** and open the door.
9. Use the measuring tool to measure the cut made on the workpiece
10. Press **[X DIAMETER MEASURE]** [D] to record the X-axis position in the offset table.
11. Type the workpiece diameter and press **[ENTER]** to add it to the X-axis offset. The offset that corresponds to the tool and turret station is recorded.
12. Close the lathe door. Type 50 and press **[FWD]** for the spindle to start.

13. Use the turning tool loaded in station 1 to make a small cut on the face of the material clamped in the spindle. Approach the part carefully and feed slowly during the cut.
14. After the small cut is done, jog away from the part using X-axis. Move far enough away from the part so that you can take a measurement with your measuring tool.
15. Press **[Z FACE MEASURE]** (E) to record the current Z position in the offset table.
16. The cursor moves to the Z-axis location for the tool.
17. Repeat all of the previous steps for each tool in the program. Do tool changes at a safe location with no obstructions.

4.11.4 Work Offsets

Press the **[OFFSET]**, then the **[F4]** to view the work offset values. The work offsets can be entered manually or automatically with a probe. The list below will shows how each work offset setting works.

F4.25: Work Offsets Display

1. G Code - This column displays all the available work offset G-codes. For more information on these work offsets See “G52 Set Local Coordinate System FANUC (Group 00)” on page 322., See “G54-G59 Coordinate System #1 - #6 FANUC (Group

12)" on page 322., See "G50 Set Global Coordinate Offset FANUC (Group 00)" on page 322.

2. X, Y, Z, Axis - This column displays the work offset value for each axis.
3. Work Material - This column is used by the VPS feeds and speeds library.
4. These functions buttons allow you to set the offset values. Type in the desired work offset value and press **[F1]** to set the value. Press **[F3]** to set a probing action. Press **[F4]** to toggle from work to tool offset tab. Type in a value and press **[ENTER]** to add to the current value.

4.11.5 Setting the Work Offset

Your CNC control programs all move from Part Zero, a user-defined reference point. To set Part Zero:

1. Press **[MDI/DNC]** to select Tool #1.
2. Enter `T1` and press **[TURRET FWD]**.
3. Jog X and Z until the tool just touches the face of the part.
4. Press **[OFFSET]** until the **`Work Zero Offset`** display is active. Highlight the **`Z Axis`** column and G-code row that you want to use (G54 recommended).
5. Press **[Z FACE MEASURE]** to set part zero.

4.12 Chuck and Collet Replacement

These procedures describe how to remove and replace a chuck or collet.

For detailed instructions on the procedures listed in this section, go to www.HaasCNC.com and select Service tab.

4.12.1 Chuck Installation

To install a chuck:

NOTE: *If necessary, install an adapter plate before installing the chuck.*

1. Clean the face of the spindle and the back face of the chuck. Position the drive dog at the top of the spindle.
2. Remove the jaws from the chuck. Remove the center cup or coverplate from the front of the chuck. If available, install a mounting guide into the drawtube and slide the chuck over it.
3. Orient the chuck so that one of the guide holes are aligned with the drive dog. Use the chuck wrench to thread the chuck onto the drawtube.

4. Screw the chuck all the way onto the drawtube and back it off 1/4 turn. Align the drive dog with one of the holes in the chuck. Tighten the six (6) SHCS.
5. Install the center cup or plate with three (3) SHCS.
6. Install the jaws. If necessary replace the rear cover plate. This is located on the left side of the machine.

4.12.2 Chuck Removal

This is a summary of the chuck removal process.

F4.26: Chuck Removal Illustration: [1] Chuck Adapter Plate, [2] 6X Socket Head Cap Screws (SHCS), [3] Chuck, [4] 6X SHCS.

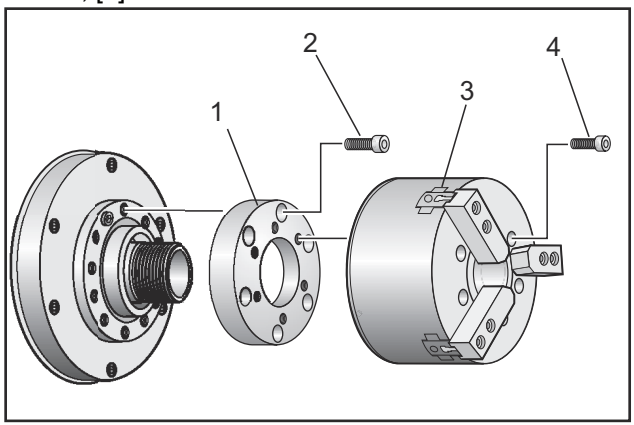

1. Move both axes to their zero positions. Remove the chuck jaws.
2. Remove the three (3) screws that mount the center cup (or plate) from the center of the chuck and remove the cup.

CAUTION: *You must clamp the chuck when you do this next step, or you will damage the drawtube threads.*

3. Clamp the chuck [3] and remove the (6) SHCS [4] that mount the chuck to the spindle nose or adapter plate.
4. Unclamp the chuck. Place a chuck wrench inside the center bore of the chuck and unscrew the chuck from the drawtube. If equipped, remove adapter plate [1].

WARNING: *The chuck is heavy. Be prepared to use lifting equipment to support the chuck while you remove it.*

4.12.3 Chuck/Drawtube Warnings

WARNING: *Check the workpiece in the chuck or collet after any power loss. A power outage reduces the clamping pressure on the workpiece which can shift in the chuck or collet. Setting 216 turns off the Hydraulic pump after the time specified for the setting.*

WARNING: *Damage results if you attach dead length stops to the hydraulic cylinder.*

WARNING: *Do not machine parts larger than the chuck.*

WARNING: *Follow all of the warnings of the chuck manufacturer.*

WARNING: *Hydraulic pressure must be set correctly. See the* **`Hydraulic System Information`** *on the machine for safe operation. Setting a pressure beyond the recommendations damages the machine and/or inadequately holds the workpiece.*

WARNING: *Chuck jaws must not protrude beyond the diameter of the chuck.*

WARNING: *Improperly or inadequately clamped parts eject with deadly force.*

WARNING: *Do not exceed rated chuck RPM.*

WARNING: *Higher RPM reduces chuck clamping force. Refer to the chart.*

NOTE: *Grease your chuck weekly, and keep it clean.*

4.12.4 Collet Installation

To install a collet:

1. Thread the collet adapter into the drawtube.
2. Place the spindle nose on the spindle and align one of the holes on the back of the spindle nose with the drive dog.
3. Fasten the spindle nose to the spindle with six (6) SHCS.
4. Thread the collet onto the spindle nose and align the slot on the collet with the set screw on the spindle nose. Tighten the setscrew on the side of the spindle nose.

4.12.5 Collet Removal

To remove the collet:

F4.27: Collet Removal Illustration: [1] Draw Tube, [2] Collet adapter, [3] Set Screw, [4] Set Screw Slot, [5] Collet, [6] Collet wrench, [7] Spindle Nose.

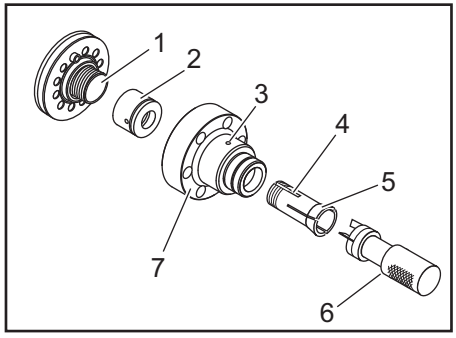

1. Loosen the set screw [3] on the side of the spindle nose [7]. Using the collet wrench [6], unscrew the collet [5] from the spindle nose [7].
2. Remove the six (6) SHCS from the spindle nose [7] and remove it.
3. Remove the collet adapter [2] from the drawtube [1].

4.12.6 Chuck Foot Pedal

F4.28: Chuck Foot Pedal Icon

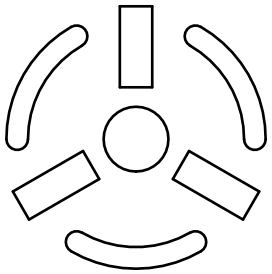

NOTE: *Dual-spindle lathes have a pedal for each chuck. The relative positions of the pedals indicate the chuck that they control (i.e., the left-hand pedal controls the main spindle and the right-hand pedal controls the secondary spindle).*

When you press this pedal, the automatic chuck clamps or unclamps, equivalent to an `M10` / `M11` command for the main spindle, or `M110` / `M111` command for the secondary spindle. This allows you to operate the spindle hands-free while you load or unload a workpiece.

The ID / OD clamp settings for the main and secondary spindles apply when you use this pedal (refer to Setting 282 on page **451** for more information).

Use Setting 332 to enable or disable all pedal controls. Refer to Setting 332 on page **454**

4.12.7 Steady Rest Foot Pedal

F4.29: Steady Rest Foot Pedal Icon

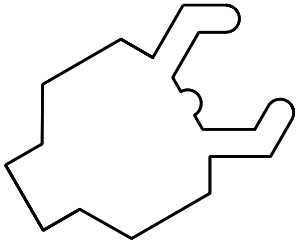

When you press this pedal, the hydraulic steady rest clamps or unclamps, equivalent to the M-code commands that control the steady rest (M146 to clamp, M147 to unclamp). This allows you to operate the steady rest hands-free while you handle the workpiece. The user interface for the steady rest can be found under Commands-> Devices -> Mechanisms tab. Press the **[F2]** button to clamp/unclamp the steady rest.

To unclamp the steady rest while the spindle is turning, the rpm must be below setting 283. Refer to page **451** for more information.

When clamp/unclamp via M-code, there is an inherent delay for the action to complete. Use Setting 358 to adjust the clamp/unclamp delay. Refer to page **459** for more information.

Use Setting 360 to enable or disable the steady rest foot pedal. Refer to page **459** for more information.

4.13 Drawtube Operation

The hydraulic unit provides the pressure necessary to clamp a part.

4.13.1 Clamping Force Adjustment Procedure

To adjust the clamping force on the drawtube:

F4.30: Draw tube Clamping Force Adjustment: [1] Locking knob, [2] Adjustment knob.

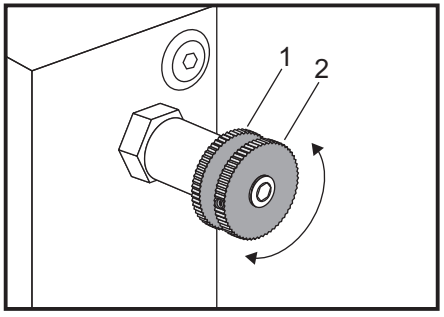

1. Go to Setting 282 on the **Settings** page and choose either **I.D.** clamping or **O.D.** clamping. Do not do this with a program running.
2. Turn the locking knob [1] counterclockwise to loosen.
3. Turn the adjustment knob [2] until the gauge reads the desired pressure. Turn clockwise to increase pressure. Turn counterclockwise to decrease the pressure.
4. Turn the locking knob [1] clockwise to tighten.

4.13.2 Drawtube Cover Plate

Before using the Bar Feeder,

F4.31: Draw Tube Cover Plate [1].

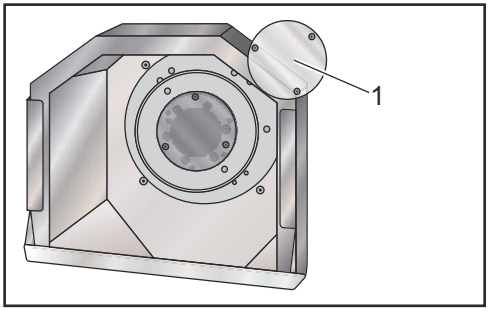

1. Remove the cover plate [1]at the far end of the drawtube.
2. Replace the cover plate anytime bar stock is not being fed automatically.

4.14 Tooling

This section describes tool management in the Haas control: commanding tool changes, loading tools into holders, and Advanced Tool Management.

4.14.1 Advanced Tool Management Introduction

Advanced Tool Management (ATM) lets you set up groups of duplicate tools for the same or a series of jobs.

ATM classifies duplicate or backup tools into specific groups. In your program, you specify a group of tools instead of a single tool. ATM tracks the tool use in each tool group and compares it to your defined limits. When a tool reaches a limit, the control considers it “expired.” The next time your program calls that tool group, the control chooses a non-expired tool from the group.

When a tool expires:

- The beacon will flash.
- ATM puts the expired tool in the **`EXP`** group
- Tool groups that contain the tool appear with a red background.

To use ATM, press **[CURRENT COMMANDS]**, and then select ATM in the tabbed menu. The ATM window has two sections: **`Allowed Limits`** and **`Tool Data`**.

F4.32: Advanced Tool Management Window: [1] Active window label, [2] Allowed Limits window, [3] Tool Group window, [4] Tool Data window

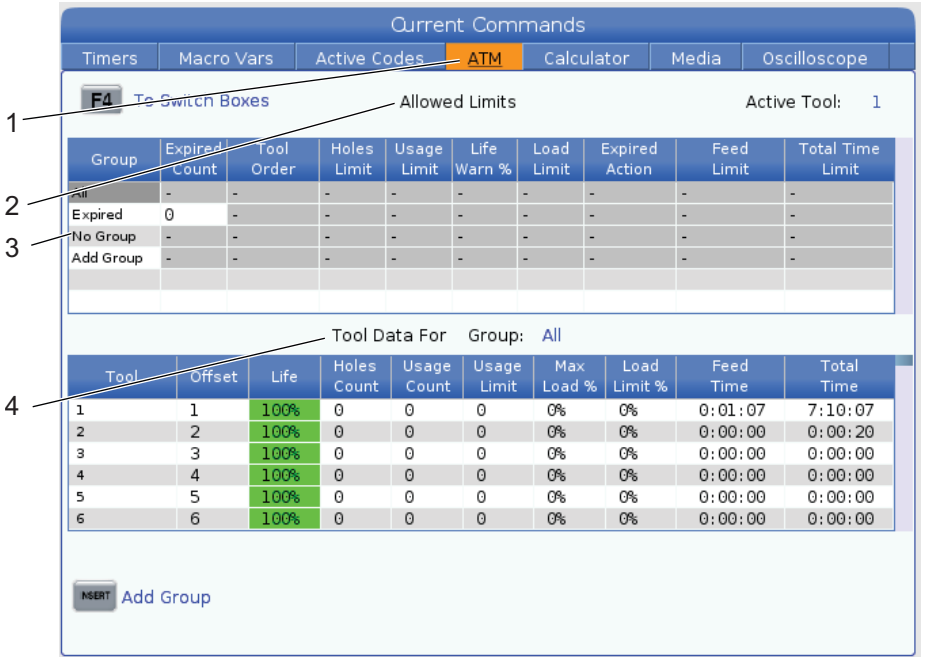

Allowed Limits

This table gives data about all of the current tool groups, including default groups and user-specified groups. **ALL** is a default group that lists all of the tools in the system. **EXP** is a default group that lists all of the tools that are expired. The last row in the table shows all of the tools that are not assigned to tool groups. Use the cursor arrow keys or **[END]** to move the cursor to the row and see these tools.

For each tool group in the **ALLOWED LIMITS** table, you define limits that determine when a tool expires. The limits apply to all tools assigned to this group. These limits affect every tool in the group.

The columns in the **ALLOWED LIMITS** table are:

- **GROUP** - Displays the tool group's ID number. this is the number you use to specify the tool group in a program.
- **EXP #** - Tells you how many tools in the group are expired. If you highlight the **ALL** row, you see a list of all of the expired tools in all groups.
- **ORDER** - Specifies the tool to use first. If you select **ORDERED**, ATM uses the tools in tool number order. You can also have ATM automatically use the **NEWEST** or **OLDEST** tool in the group.
- **USAGE** - The maximum number of times the control can use a tool before it expires.
- **HOLES** - The maximum number of holes a tool is allowed to drill before it expires.

- **WARN** - The minimum value for tool life remaining in the group before the control gives a warning message.
- **LOAD** - The allowed load limit for tools in the group before the control does the **ACTION** that the next column specifies.
- **ACTION** - The automatic action when a tool reaches its maximum tool load percentage. Highlight the tool action box to change and press **[ENTER]**. Use the **[UP]** and **[DOWN]** cursor keys to select the automatic action from the pull down menu (**ALARM**, **FEEDHOLD**, **BEEP**, **AUTOFEED**, **NEXT TOOL**).
- **FEED** - The total amount of time, in minutes, that the tool can be in a feed.
- **TOTAL TIME** - The total amount of time, in minutes, that the control can use a tool.

Tool Data

This table gives information about each tool in a tool group. To look at a group, highlight it in the **ALLOWED LIMITS** table, and then press **[F4]**.

- **TOOL#** - Shows the tool numbers used in the group.
- **LIFE** - The percentage of life left in a tool. This is calculated by the CNC control, using actual tool data and the allowed limits the operator entered for the group.
- **USAGE** - The total number of times that a program has called the tool (number of tool changes).
- **HOLES** - The number of holes the tool has drilled/ tapped/ bored.
- **LOAD** - The maximum load, in percent, exerted on the tool.
- **LIMIT** - The maximum load allowed for the tool
- **FEED** - The amount of time, in minutes, the tool has been in a feed.
- **TOTAL** - The total amount of time, in minutes, the tool has been used.

Advanced Tool Management Macros

Advanced Tool Management (ATM) can use macros to obsolete a tool within a tool group. Macros 8001 to 8099 represent tools 1 through 99. You can set one of these macros to 1 to expire a tool. For example:

`8001` = 1 (this expires tool 1)

`8001` = 0 (this makes tool 1 available)

Macro variables `8500` - `8515` enable a G code program to obtain tool group information. When you specify a tool group ID number with macro `8500`, the control returns the tool group information in macro variables `#8501` through `#8515`. Refer to the variables `#8500` - `#8515` in the Macros chapter for the macro variable data label information.

Macro variables #8550 - #8564 let a G-code program obtain information about individual tools. When you specify an individual tool ID number with macro #8550, the control returns the individual tool information in macro variables #8551 - #8564. You can also specify an ATM group number with macro 8550. In this case, the control returns the individual tool information for the current tool in the specified ATM tool group in macro variables 8551 - 8564. Refer to the description for variables #8550 - #8564 in the Macros chapter. The values in these macros provide data that is also accessible from macros starting at 1601, 1801, 2001, 2201, 2401, 2601, 3201, and 3401 and for macros starting at 5401, 5501, 5601, 5701, 5801, and 5901. These provide access for tool data for tools 1-99. Macros 8551 - 8564 give access to the same data, but for tools 1-99 for all data items.

Save Advanced Tool Management Tables

You can save to USB the variables associated with Advanced Tool Management (ATM).

To save the ATM information:

1. Select the USB device in the Device Manager (**[LIST PROGRAM]**).
2. Type a filename on the input line.
3. Press **[F4]**.
4. Highlight **SAVE ATM** in the pop-up menu.
5. Press **[ENTER]**.

Restore Advanced Tool Management Tables

You can restore from USB the variables associated with Advanced Tool Management (ATM).

To restore the ATM information:

1. Select the USB device in the Device Manager (**[LIST PROGRAM]**).
2. Press **[F4]**.
3. Highlight **LOAD ATM** in the pop-up menu.
4. Press **[EMERGENCY STOP]**.
5. Press **[ENTER]**.

4.15 Tool Turret Operations

To operate the tool turret, refer to the following sections: Air Pressure, Eccentric Locating Cam Buttons, Protective Cap, and Tool Load or Tool Change.

4.15.1 Air Pressure

Low air pressure or insufficient air volume reduces the pressure applied to the turret clamp/unclamp piston. This can slow down the turret index time, or the turret may not unclamp.

4.15.2 Eccentric Locating Cam Buttons

Bolt-on turrets have eccentric locating cam buttons that let you finely align your ID tool holders to the spindle centerline.

Mount the tool holder to the turret and align the tool holder to the spindle in the X-axis. Measure the alignment in the Y-axis. If necessary remove the tool holder and use a narrow tool in the cam button hole, to rotate the eccentric to correct misalignment.

T4.3: This table gives the result for specific positions of the cam button.

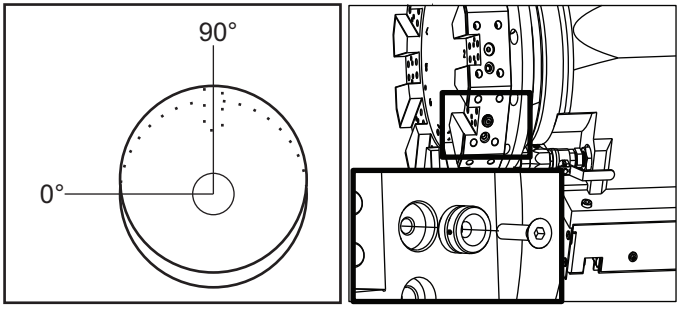

Rotation (degrees)	Result
0	no change
15	0.0018" (0.046 mm)
30	0.0035" (0.089 mm)
45	0.0050" (0.127 mm)
60	0.0060" (0.152 mm)
75	0.0067" (0.170 mm)
90	0.0070" (0.178 mm)

4.15.3 Protective Cap

IMPORTANT: *Insert protective caps into empty turret pockets to protect them from accumulating debris.*

F4.33: Turret Protective Caps in Empty Pockets

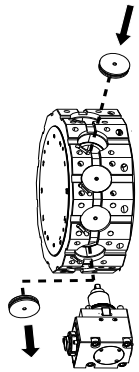

4.15.4 Tool Load or Tool Change

To load or change tools:

NOTE: *Y-Axis lathes return the turret to the zero position (spindle centerline) after a tool change.*

1. Enter **`MDI`** mode.
2. Optional: Type the tool number that you want to change to in the format `Tnn`.
3. Press **[TURRET FWD]** or **[TURRET REV]**.

   If you specified a tool number, the turret indexes to that turret position. Otherwise, the turret indexes to the next or the previous tool.

4.15.5 Hybrid Turret, VDI, and BOT Centerline Offset

To set the X offset to centerline for tools:

1. Press **[HANDLE JOG]** and enter the**`Tool Geometry`** offset page.
2. Select the **`X Offset`** column and press **[F2]**.

For BOT (Bolt-On) turrets: Pressing **[F2]** sets an X-axis I.D. Tool Offset on center for a 1" (25 mm) I.D. BOT tool. Adjust offset manually for other size tooling or after-market toolholders.

For VDI (Verein Deutscher Ingenieure) turrets: Pressing **[F2]** sets an X-axis tool offset on center of the VDI40 stations.

For Hybrid (BOT and VDI40 combination) turrets: Pressing **[F2]** sets an X-axis tool offset on center of the VDI40 stations.

4.16 Tailstock Setup and Operation

The ST-10 tailstock is manually positioned, then the quill is hydraulically applied to the workpiece. Command hydraulic quill motion using the following M-codes:

`M21`: Tailstock Forward

`M22`: Tailstock Reverse

When an `M21` is commanded, the tailstock quill moves forward and maintains continuous pressure. The tailstock body should be locked in place before commanding an `M21`.

When an `M22` is commanded, the tailstock quill moves away from the workpiece. Hydraulic pressure is applied to retract the quill, then the hydraulic pressure is powered off. The hydraulic system has check valves that hold the position of the quill. Hydraulic pressure is then applied again on Cycle Start and on program looping M99 to ensure the quill remains retracted.

4.16.1 Tailstock Types

There are three basic types of tailstock: hydraulic quill, hydraulic positioned, and servo. The type of tailstock you have depends on the lathe model, and each type has different operation characteristics.

4.16.2 ST-10 Tailstock Operation

In the ST-10, you position the tailstock manually and activate a lock lever to hold it in place.

CAUTION: *Be sure to move the tailstock when necessary to avoid a collision.*

The ST-10 tailstock has a fixed head, and a quill with 4" (102 mm) of travel. The only automatically moving part is the quill. Adjust the hydraulic pressure at the HPU to control quill hold force. Refer to the decal attached to the machine for information on quill hold force and hydraulic pressure.

You cannot move the tailstock quill with the **[HANDLE JOG]** control or the Remote Jog Handle. Also, **[POWER UP/RESTART]** or **[ZERO RETURN]** and **[ALL]** do not move the tailstock quill. The ST-10 tailstock does not have an axis assignment.

4.16.3 Hydraulic Tailstock (ST-20/30)

In ST-20 and ST-30 model lathes, a hydraulic cylinder positions the tailstock and applies hold force to the workpiece.

Adjust hydraulic pressure at the HPU to control tailstock hold force. Refer to the decal attached to your machine to determine the pressure setting for the hold force you need.

Recommended minimum hydraulic tailstock operating pressure is 120 psi. If hydraulic pressure is set lower than 120 psi, the tailstock may not function reliably.

NOTE: *During machine operation,* **[FEED HOLD]** *does not stop hydraulic tailstock motion. You must press* **[RESET]** *or* **[EMERGENCY STOP]**.

Hydraulic Tailstock (ST-20/30) Startup Procedure

If power to the lathe is shut off or interrupted while the hydraulic tailstock is engaged with a workpiece, the hold force is lost. Support the workpiece and zero return the tailstock to resume operation when power is restored.

4.16.4 ST-40 Servo Tailstock Operation

In ST-40 model lathes, a servo motor positions the tailstock and applies hold force to the workpiece.

Change Setting 241 to control servo tailstock hold force. Use a value between 1000 and 4500 pounds-force (if Setting 9 is INCH) or 4450 and 20110 Newtons (if Setting 9 is MM).

Tailstock load and current hold force are displayed as the B Axis in the axis load display (in modes such as **`MDI`** and **`MEM`**). The bar graph indicates current load, and the red line indicates the maximum hold force value specified in Setting 241. Actual hold force is displayed next to the bar graph. In **`Jog`** mode, this display appears in the **`Active Tool`** pane.

A hold icon [3] displays whether or not the tailstock is engaged. Refer to page **81** for more information on the tailstock hold icon.

ST-40 Servo Tailstock Startup Procedure

If power to the lathe is shut off or interrupted while the servo tailstock is engaged with a workpiece, the servo brake engages to preserve hold force and keep the tailstock in place.

When power is restored, the control displays the message *`Tailstock Force Restored`*. You can resume operating the lathe without zero returning the tailstock, if there are no `M22` commands in the program. These commands cause the tailstock to back away from the workpiece, which could then drop.

CAUTION: *Before you resume a program with an `M22` command after a power interruption, edit the program to remove or block delete the tailstock motion commands. You can then resume the program and complete the part. Keep in mind that until you zero return the tailstock, the control does not know the tailstock's position; therefore, Settings 93 and 94 do not protect the tailstock restricted zone from a crash.*

Zero return the tailstock before starting a new cycle on a new workpiece. You can then add the tailstock motion commands back into the program for future cycles.

The first use of the tailstock foot pedal after a power interruption zero returns the tailstock. Make sure the workpiece is supported before activating the tailstock foot pedal.

4.16.5 ST-20/30/40 Tailstock Operation

The ST-20/30/40 tailstock operation includes Settings, M-codes, Foot Pedal, and jogging functions.

F4.34: Setting 105 [3], 341 [2], 342[1], and [4] Home position.

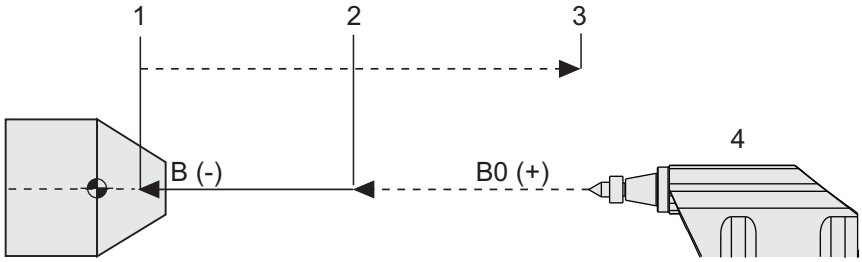

4.16.6 Tailstock Settings

Below are the available tailstock settings:

- 93 - Tailstock X Clearance To learn more about this setting refer to page **435**
- 94 - Tailstock Z Clearance To learn more about this setting refer to page **435**
- 105 - Tailstock Retract Distance To learn more about this setting refer to page **437**
- 341 - Tailstock Rapid Position To learn more about this setting refer to page **456**
- 342 - Tailstock Advance Distance To learn more about this setting refer to page **456**

NOTE: *Settings 93, 94, 105, 341, and 342 do not apply to the ST-10 tailstock, since it is positioned manually.*

4.16.7 Tailstock Foot Pedal Operation

When you press this pedal, the tailstock (or the tailstock quill) moves toward or away from the spindle, equivalent to an M21or M22 command, depending on the current position. If the tailstock is away from the retract point, the foot pedal moves the tailstock toward the retract point (M22). If the tailstock is at the retract point, the foot pedal moves the tailstock toward the hold point (M21).

If you press the foot pedal while the tailstock is in motion, the tailstock stops and a new sequence must begin.

Press and hold the pedal for 5 seconds to retract the tailstock quill the full distance and maintain retract pressure. This makes sure the tailstock quill does not creep forward. Use this method to stow the tailstock quill any time it is not in use.

NOTE: *The tailstock position can change over time if it is left at a position that is not fully retracted or not in contact with a workpiece. This is due to normal hydraulic system leakage.*

Use Setting 332 to enable or disable the tailstock pedal control. Refer to page **454** for more information.

4.16.8 Tailstock Restricted Zone

Setting up the tailstock involves setting a tailstock Restricted Zone.

Use Setting 93 and Setting 94 to make sure that the turret or any tools in the turret do not collide with the tailstock. Test the limits after you change these settings.

These settings make a restricted zone. The restricted zone is a protected rectangular area at the lower right of the lathe work space. The restricted zone changes so that the Z-Axis and tailstock maintain a safe distance from each other when below a specified X-Axis clearance plane.

Setting 93 specifies the X-Axis clearance plane and Setting 94 specifies the separation between the Z Axis and the B Axis (tailstock axis). If a programmed motion crosses the restricted zone, a warning message appears.

X Clearance Plane (Setting 93)

To set a value for the X clearance plane (Setting 93):

1. Place the control in **MDI** mode.
2. Select the longest tool that protrudes furthest on the X-axis plane in the turret.
3. Place the control in **Jog** mode.
4. Select the X-axis for jogging and move the X-axis clear of the tailstock.

5. Select the tailstock (B-axis) for jogging and move the tailstock beneath the selected tool.
6. Select the X-axis and approach the tailstock until the tool and tailstock are about 0.25" apart.
7. Back the tool away in the X Axis a small amount then enter the value for Setting 93.

Z- and B-Axis below the X Clearance Plane (Setting 94)

To set a separation for Z- and B-Axis below the X Clearance Plane (Setting 94):

1. Press **[ZERO RETURN]** and **[HOME G28]**.
2. Select the X-axis and move the turret in front of the tailstock quill tip.
3. Move the Z-axis so that the rear of the tool turret is within about 0.25" of the tailstock quill tip.
4. Enter the value in the Z-Axis **`Machine Position`** display for Setting 94.

Canceling a Restricted Zone

You may not always want to use a tailstock restricted zone (during setup, for example). To cancel a restricted zone:

1. Enter a `0` in Setting 94.
2. Enter the maximum X-Axis machine travel in Setting 93.

4.16.9 Jogging the Tailstock

CAUTION: *If you position the tailstock manually, do not use an `M21` in your program. This makes the tailstock move away from the workpiece and then against the workpiece, which may cause the workpiece to drop. When a servo tailstock restores hold force after a power interruption, the tailstock is considered manually positioned since the control does not know the tailstock position until you zero return it.*

You cannot jog the ST-40 servo tailstock while it is engaged with a workpiece, or while the spindle is running.

To jog the tailstock:

1. Select **Jog** mode.
2. Press **[TS <—]** to jog the tailstock at feed speed toward the chuck, or press **[TS —>]** to jog the tailstock at feed speed away from the chuck.
3. Press **[TS RAPID]** and **[TS <—]** simultaneously to move the tailstock at rapid speed toward the chuck. Or, press **[TS RAPID]** and **[TS —>]** simultaneously to move the tailstock at rapid speed away from the chuck. The control reverts to the last jogged axis when the keys are released.

4.17 Dual Action - Parts Catcher - Setup

The following procedure will show you how to set up the dual action parts catcher.

1. Turn the Setup/Run key to setup mode.
2. Clamp a piece of bar stock.
3. Press **[CURRENT COMMANDS]**. Go to the **Devices** tab, then **Mechanisms** tab.

F4.35: Parts Catcher Travel Adjustment

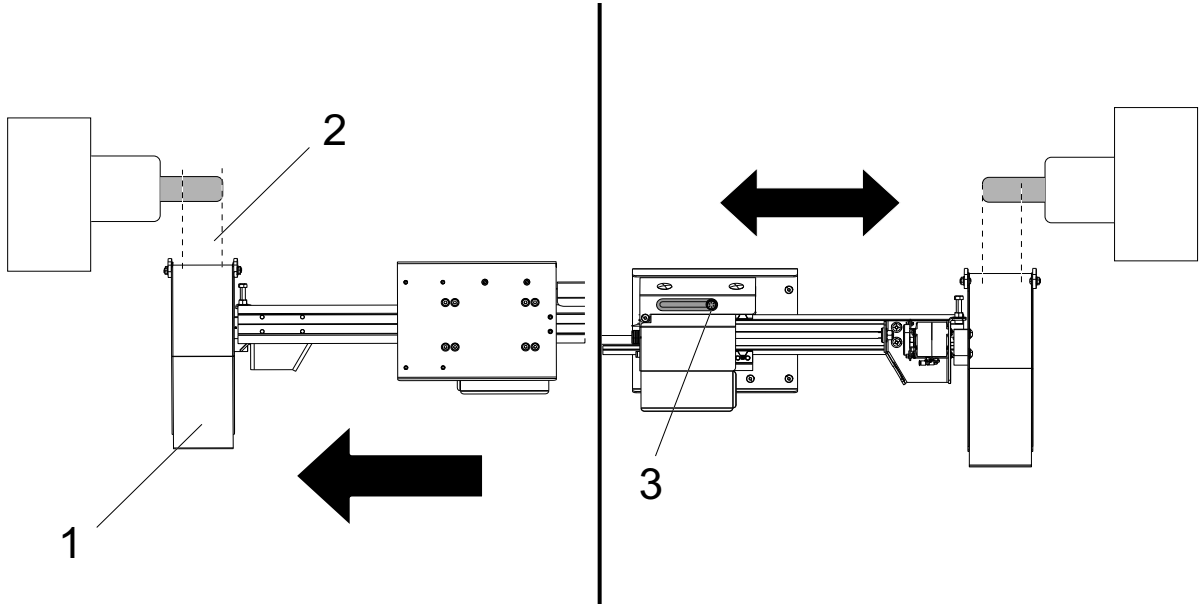

4. Press **[F3]** to partially extend the parts catcher.
5. Determine if the parts catcher [1] travel is correct [2]. If not loosen the cylinder bracket bolt [3]. Manually move the parts catcher to the desired location and tighten the bolt.
6. Press **[F3]** to partially extend the parts catcher. The parts catcher should be in the correct position.

F4.36: Parts Catcher Rotation Adjustment

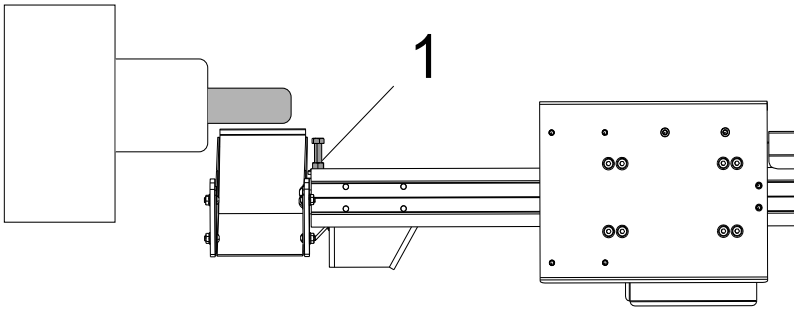

7. Press **[F2]** to rotate the parts catcher towards the part.
8. The parts catcher should be at the highest position but without touching the part. To adjust the rotation of the parts catcher, loosen the lock nut and tighten or loosen the bolt. Once the correct rotation position has been found tighten the lock nut.
9. Press **[F3]** to rotate the parts catcher back to the stow position, open the door to adjust the rotate bolt then close the door and press **[F2]** to verify position. Repeat this process until the parts catcher rotates to the desired location.

4.18 Features

Haas operation features:

- Graphics Mode
- Background Edit
- Axis Overload Timer

4.18.1 Graphics Mode

A safe way to troubleshoot a program is to press **[GRAPHICS]** to run it in graphics mode. No movement occurs on the machine, instead the movement is illustrated on the screen.

F4.37: Graphics Mode Display

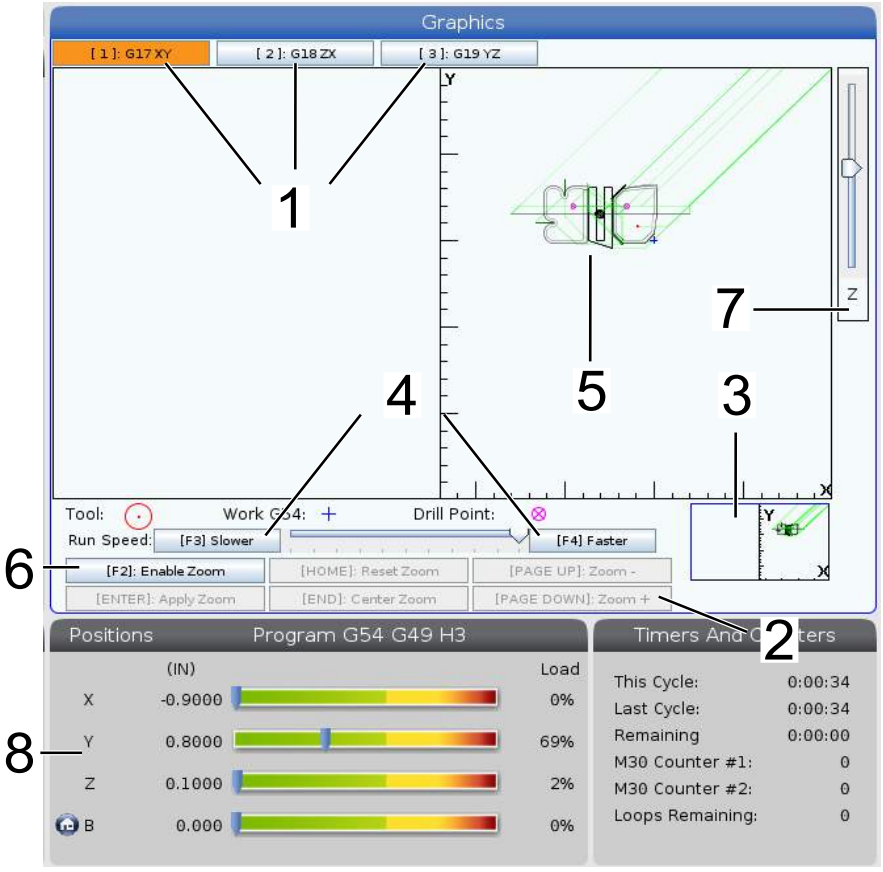

1. **Axis Planes** Press **[1]** to view the graphics in `G17` plane, press **[2]** for`G18` plane or press **[3]** to view in `G19` plane.
2. **Key Help Area** The lower-left part of the graphics display pane is the function key help area. This area shows you the function keys that you can use, and a description of what they do.
3. **Locator Window** The lower-right part of the pane displays the simulated machine table area, and it shows where the simulated view is zoomed and focused.
4. **Graphics Speed** Press **[F3]** or **[F4]** to run the desired graphics speed.
5. **Tool Path Window** The large window in the center of the display gives a simulated view of the work area. It displays a cutting tool icon and simulated tool paths.

NOTE: *Feed motion appears as a black line. Rapid moves appear as a green line. Drill cycle locations appear with an X.*

NOTE: *If Setting 253 is* **ON***, the tool diameter is shown as a thin line. If it is* **OFF***, the tool diameter specified in the Tool Offsets Diameter Geometry table is used.*

6. **Zoom** Press **[F2]** to display a rectangle (zoom window) that shows the area that the zoom operation will move to. Use **[PAGE DOWN]** to decrease the size of the zoom window (zoom in), and use **[PAGE UP]** to increase the size of the zoom window (zoom out). Use the cursor arrow keys to move the zoom window to the location you want to zoom, and press **[ENTER]** to complete the zoom. The control scales the tool path window to the zoom window. Run the program again to display the tool path. Press **[F2]** and then **[HOME]** to expand the Tool Path window to cover the entire work area.
7. **Position Pane** The position pane displays axis locations just as it would during a live part run.

To run a program in graphics mode:

1. Press **[GRAPHICS]**.
2. Press **[CYCLE START]**.

NOTE: *Graphics mode does not simulate all machine functions or motions.*

4.18.2 Axis Overload Timer

When a spindle or an axes current load is 180% load, a timer starts and displays in the **POSITION** pane. The timer starts at 1.5 minutes and counts down to zero. An axis overload alarm *SERVO OVERLOAD* displays when the time has expired to zero.

4.19 Run-Stop-Jog-Continue

This feature lets you stop a running program, jog away from the part, and then start the program again.

1. Press **[FEED HOLD]**.
   Axis motion stops. The spindle continues to turn.

2. Press **[X]**, **[Y]** or **[Z]**, then press **[HANDLE JOG]**. The control stores the current X, Y, and Z positions.

NOTE: *You can jog only the X, Y, and Z Axes in this mode.*

3. The control gives the message *Jog Away*. Use the jog handle or jog keys to move the tool away from the part. You can command coolant with **[AUX CLNT]** or **[COOLANT]**. You can start or stop the spindle with the spindle override keys. You can also release the tool to change inserts.

CAUTION: *When you start the program again, the control uses the previous offsets for the return position. Therefore, it is unsafe and not recommended to change tools and offsets when you interrupt a program.*

4. Jog to a position as close as possible to the stored position, or to a position where there is an unobstructed rapid path back to the stored position.
5. Press **[MEMORY]** or **[MDI]** to return to run mode. The control continues only if you return to the mode that was in effect when you stopped the program.
6. Press **[CYCLE START]**. The control gives the message *Jog Return* and rapids Y and Z at 5% to the position where you pressed **[FEED HOLD]**. It then returns the X Axis. If you press **[FEED HOLD]** during this motion, axis motion pauses and the control gives the message *Jog Return Hold*. Press **[CYCLE START]** to resume the Jog Return motion. The control goes into a feed hold state again when the motion is finished.

CAUTION: *The control does not follow the same path that you used to jog away.*

7. Press **[CYCLE START]** again and the program resumes operation.

4.20 Haas Robot Interface - Introduction

The Haas Robot Interface is a simple way to integrate and operate an after market 6-axis robot with your Haas machine, to automate part production and boost unattended productivity. You will be able to operate, control the robot directly from the Haas interface. Using the Haas robot interface the robot can be programmed and operated with just a few tabs inside the **[CURRENTCOMMANDS]**. These tabs will ask you a series of questions about your setup and ask you to move the robot arm to teach you various motions and positions required for operation.

4.20.1 Haas Robot Package - Installation

The Haas Robot Package installation procedure is located on the website. Scan the code below with your mobile device to go directly to the procedure.

F4.38: Haas Robot Package 1 - Lathe Installation

4.20.2 Haas Robot - Quick Start Guide

The Haas Robot - Quick Start Guide is located on the website click on the following link: Haas Robot - Quick Start Guide. You can also scan the code below with your mobile device to go directly to the procedure.

F4.39: Scan the code below with your mobile device to go directly to the procedure.

4.21 More Information Online

For updated and supplemental information, including tips, tricks, maintenance procedures, and more, visit the Haas Service page at www.HaasCNC.com. You can also scan the code below with your mobile device to go directly to the Haas Service page:

Chapter 5: Programming

5.1 Create / Select Programs for Editing

You use the Device Manager (**[LIST PROGRAM]**) to create and select programs for editing. Refer to page **102** to create a new program. Refer to page **104** to choose an existing program to edit.

5.2 Program Edit Modes

The Haas control has (2) program edit modes: The program editor or manual data input (MDI). You use the program editor to make changes to numbered programs stored in an attached memory device (machine memory, USB, or net share). You use MDI mode to command the machine without a formal program.

The Haas control screen has (2) program edit panes: The Active Program / MDI pane, and the Program Generation pane. The Active Program / MDI pane is on the left side of the screen in all display modes. The Program Generation pane appears only in **`EDIT`** mode.

F5.1: Example Edit Panes. [1] Active Program / MDI Pane, [2] Program Edit Pane, [3] Clipboard Pane

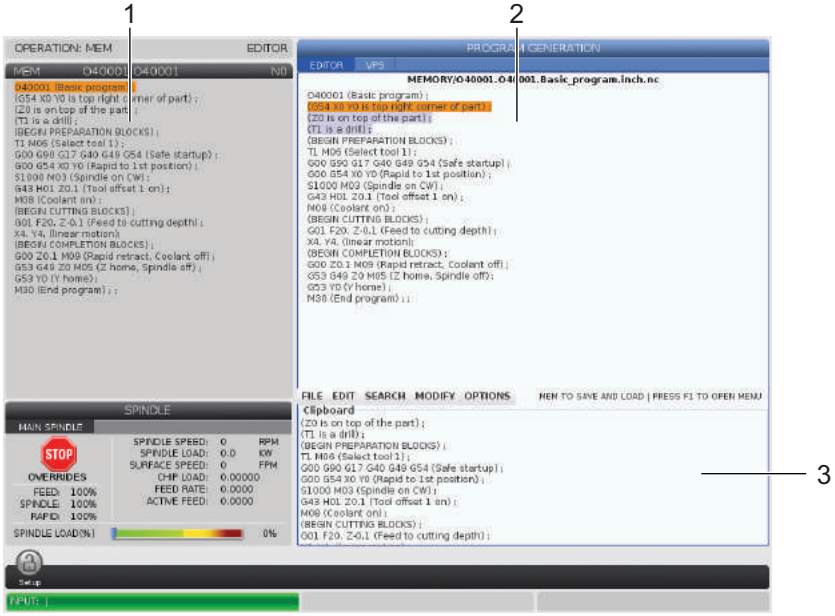

5.2.1 Basic Program Editing

This section describes the basic program editing functions. These functions are available when you edit a program.

1. To write a program, or make changes to a program:
   a. To edit a program in MDI, press **[MDI]**. This is **`EDIT:MDI`** mode. The program is displayed on the Active pane.
   b. To edit a numbered program, select it in the Device Manager (**[LIST PROGRAM]**), then press **[EDIT]**. This is **`EDIT:EDIT`** mode. The program is displayed in the Program Generation pane.

2. To highlight code:
   a. Use the cursor arrow keys or the jog handle to move the highlight cursor through the program.
   b. You can interact with single pieces of code or text (cursor highlighting), blocks of code, or multiple blocks of code (block selection). Refer to the Block Selection section for more information.

3. To add code to the program:
   a. Highlight the code block you want the new code to follow.
   b. Type the new code.
   c. Press **[INSERT]**. Your new code appears after the block you highlighted.

4. To replace code:
   a. Highlight the code you want to replace.
   b. Type the code you want to replace the highlighted code with.
   c. Press **[ALTER]**. Your new code takes the place of the code you highlighted.

5. To remove characters or commands:
   a. Highlight the text you want to delete.
   b. Press **[DELETE]**. The text that you highlighted is removed from the program.

6. Press **[UNDO]** to reverse up to the last (40) changes.

NOTE: *You cannot use* **[UNDO]** *to reverse changes that you made if you exit* **`EDIT:EDIT`** *mode.*

NOTE: *In* **`EDIT:EDIT`** *mode, the control does not save the program as you edit. Press* **[MEMORY]** *to save the program and load it into the Active Program pane.*

Block Selection

When you edit a program, you can select single or multiple blocks of code. You can then copy and paste, delete, or move those blocks in one step.

To select a block:

1. Use the cursor arrow keys to move the highlight cursor to the first or last block in your selection.

NOTE: *You can start a selection at the top block or the bottom block, and then move up or down as appropriate to complete your selection.*

NOTE: *You cannot include the program name block in your selection. The control gives the message* `GUARDED CODE`*.*

2. Press **[F2]** to start your selection.
3. Use the cursor arrow keys or the jog handle to expand the selection.
4. Press **[F2]** to complete the selection.

Actions with a Block Selection

After you make a text selection, you can copy and paste it, move it, or delete it.

NOTE: *These instructions assume you have already made a block selection as described in the Block Selection section.*

NOTE: *These are actions available in MDI and the Program Editor. You cannot use* **[UNDO]** *to reverse these actions.*

1. To copy and paste the selection:
   a. Move the cursor to the location where you want to put a copy of the text.
   b. Press **[ENTER]**.

   The control puts a copy of the selection on the next line after the cursor location.

NOTE: *The control does not copy the text to the clipboard when you use this function.*

2. To move the selection:
   a. Move the cursor to the location where you want to move the text.
   b. Press **[ALTER]**.

   The control removes the text from its current location and puts it in the line after the current line.
3. Press **[DELETE]** to delete the selection.

5.2.2 Manual Data Input (MDI)

Manual Data Input (MDI) lets you command automatic CNC moves without a formal program. Your input stays on the MDI input page until you delete it.

F5.2: MDI Input Page Example

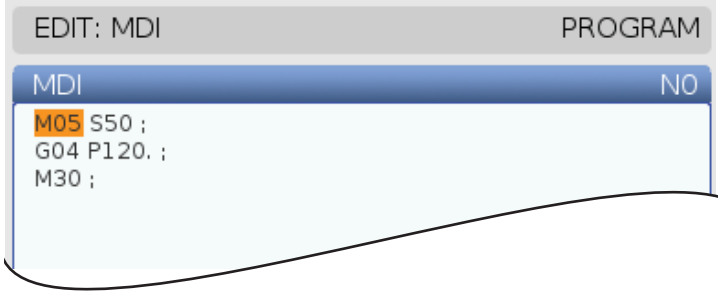

1. Press **[MDI]** to enter **MDI** mode.
2. Type your program commands in the window. Press **[CYCLE START]** to execute the commands.
3. If you want to save the program you created in MDI as a numbered program:
   a. Press **[HOME]** to put the cursor at the beginning of the program.
   b. Type a new program number. Program numbers must follow the standard program number format (Onnnnn).
   c. Press **[ALTER]**.
   d. In the RENAME pop-up window, you can type a filename and file title for the program. Only the O number is required.
   e. Press **[ENTER]** to save the program to memory.
4. Press **[ERASE PROGRAM]** to delete everything from the MDI input page.

5.2.3 Program Editor

The Program Editor is a full-featured editing environment with access to powerful functions in an easy-to-use pull-down menu. You use the Program Editor for normal editing.

Press **[EDIT]** to enter edit mode and use the Program Editor.

F5.3: Example Program Editor Screen. [1] Main Program Display, [2] Menu Bar, [3] Clipboard

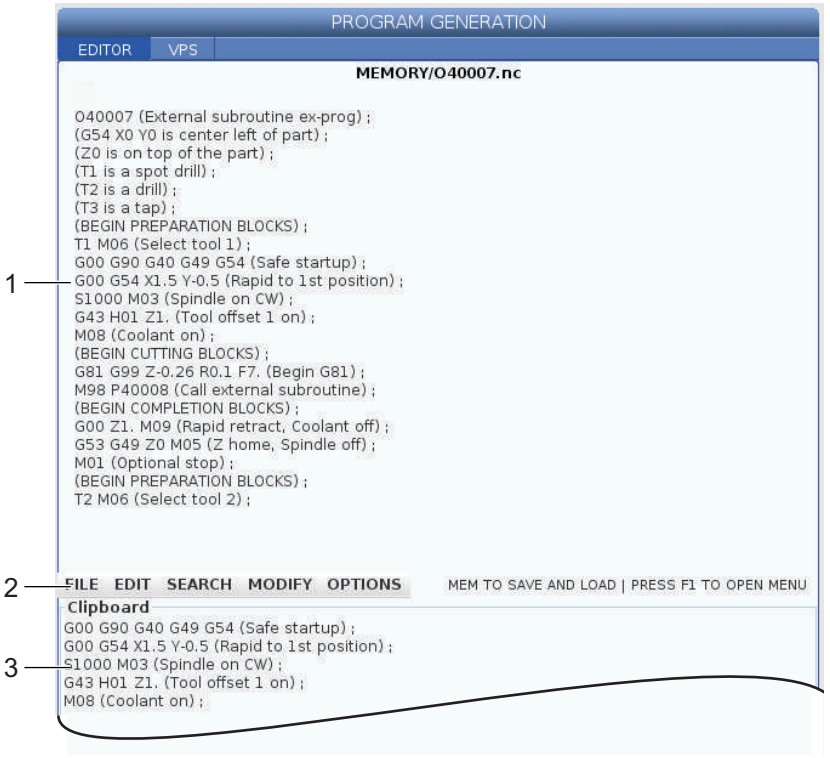

Program Editor Pull-Down Menu

The Program Editor uses a pull-down menu to give you easy access to editor functions in (5) categories: **`File`**, **`Edit`**, **`Search`**, and **`Modify`**. This section describes the categories and the choices you can make when you select them.

To use the pull-down menu:

1. Press **[EDIT]** to start the Program Editor.
2. Press **[F1]** to access the pull-down menu.

   The menu opens for the last category you used. If you have not yet used the pull-down menu, the **`File`** menu opens by default.
3. Use the **[LEFT]** and **[RIGHT]** cursor arrow keys to highlight a category. When you highlight a category, the menu appears below the category name.

4. Use the **[UP]** and **[DOWN]** cursor arrow keys to select an option inside of the current category.
5. Press **[ENTER]** to execute the command.

Some menu commands require further input or confirmation. In these cases, an input window or confirmation pop-up appears on the screen. Type your input in the field(s) where applicable, and then press **[ENTER]** to confirm the action or **[UNDO]** to close the popup and cancel the action.

File Menu

The **File** menu has these options:

- **New**: Creates a new program. In the pop-up menu fields, type an O number (required), a filename (optional), and a file title (optional). For more information about this menu, refer to “Create a New Program” in the Operation section of this manual.
- **Set To Run**: Saves the program and puts it in the active program pane on the left-hand side of the screen. You can also press **[MEMORY]** to use this function.
- **Save**: Saves the program. The program’s filename and path change from red to black to show that the changes are saved.
- **Save As**: You can save the file under any filename. The program’s new filename and path will change from red to black to show that the changes are saved.
- **Discard Changes**: Reverts any changes you’ve made since the file was last saved.

Edit Menu

The **Edit** menu has these options:

- **Undo**: Reverses the last edit operation, up to the last (40) edit operations. You can also press **[UNDO]** to use this function.
- **Redo**: Reverses the last undo operation, up to the last (40) undo operations.
- **Cut Selection To Clipboard**: Removes the selected lines of code from the program and puts them in the clipboard. Refer to “Block Selection” to learn how to make a selection.
- **Copy Selection To Clipboard**: Puts the selected lines of code in the clipboard. This operation does not remove the original selection from the program.
- **Paste From Clipboard**: Puts a copy of the clipboard contents below the current line. This does not remove the clipboard contents.
- **Insert File Path (M98)**: Lets you select a file from a directory and creates the path with the M98.
- **Insert Media File (M130)**: Lets you select a media file from a directory and creates the path with the M130.
- **Insert Media File ($FILE)**: Lets you select a media file from a directory and creates the path with the $FILE tag.
- **Special Symbols**: Inserts a special symbol.

Search Menu

The **`Search`** menu gives you access to the **`Find And Replace Text`** function. This function lets you quickly find code in the program and optionally replace it. To use it:

NOTE: *This function searches for program code, not text. You cannot use this function to find text strings (like comments).*

F5.4: Find and Replace Menu Example: [1] Text to Find, [2] Replacement Text, [3] Search Direction, [4] Find Option, [5] Replace Option, [6] Find and Replace Option, [7] Replace all Option

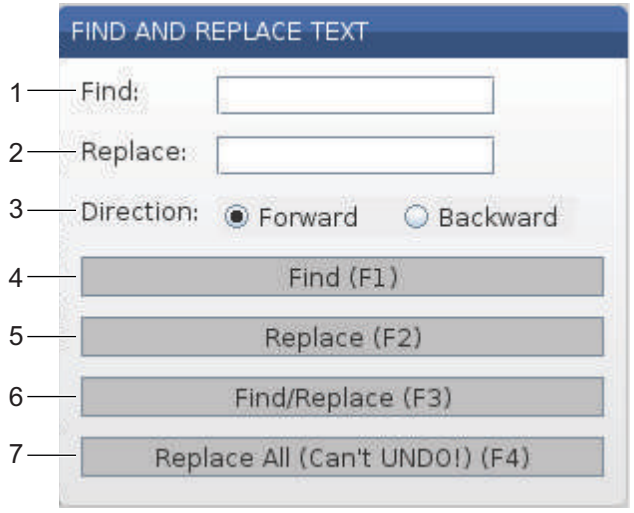

Specify Your Find / Replace Code

1. Press **[ENTER]** in the editor pull-down menu to open the **`Find And Replace Text`** menu. Use the cursor arrow keys to move between the fields in the menu.
2. In the **`Find`** field, Type the code you want to search for.
3. If you want to replace some or all of the found code, type the replacement code in the **`Replace`** field.
4. Use the **[LEFT]** and **[RIGHT]** cursor arrow keys to choose the search direction. **`Forward`** searches the program below the cursor position, **`Backward`** searches the program above the cursor position.

After you specify at least the code that you want to search for and the direction you want to search, press the function key for the search mode that you want to use:

Find Code (**[F1]**)

Press **[F1]** to find the search term.

The control searches the program in the specified direction and highlights the first occurrence of the search term. Each time you press **[F1]**, the control searches for the next occurrence of the search term, in the search direction that you specified, until it reaches the end of the program.

Replace Code (**[F2]**)

After the search function finds an occurrence of your search term, you can press **[F2]** to replace that code with the contents of the **`Replace`** field.

NOTE: *If you press* **[F2]** *with no text in the* **`Replace`** *field, the control deletes that occurrence of your search term.*

Find and Replace(**[F3]**)

Press **[F3]** instead of **[F1]** to start the find and replace operation. For each occurrence of your search term, press **[F3]** if you want to replace it with the text in the **`Replace`** field.

Replace All(**[F4]**)

Press **[F4]** to replace all of the search term occurrences in (1) step. You cannot undo this.

MODIFY Menu

The Modify menu has commands that let you make quick changes to an entire program, or to selected lines within a program.

NOTE: *You cannot use* **[UNDO]** *to reverse Modify operations. The operations also automatically save the program. If you are not sure you want to keep the changes that you make, be sure to save a copy of the original program.*

- **`Remove All Line Numbers`**: Automatically removes all N-code line numbers from the program or the selected program blocks.
- **`Renumber All Lines`**: Automatically adds N-code line numbers to the program or the selected program blocks. Enter the line number you want to start with and the increment to use between line numbers, then press **[ENTER]** to continue or press **[UNDO]** to cancel and to return to the editor.
- **`Reverse + And - Signs`**: Changes positive values for selected address codes to negative, or negative values to positive. Press the letter key for the address codes that you want to reverse to toggle selections in the pop-up menu. Press **[ENTER]** to execute the command or **[CANCEL]** to return to the editor.

F5.5: Reverse Plus and Minus Signs Menu

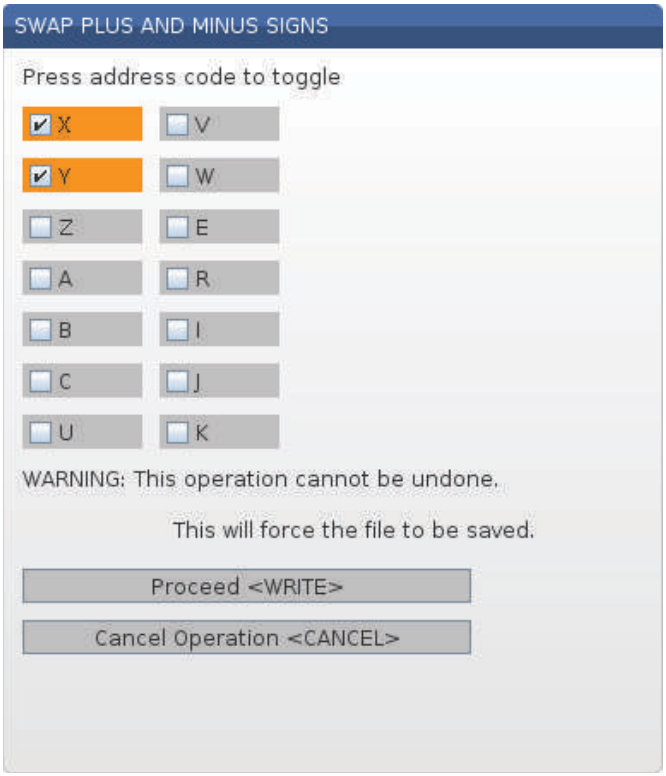

- **`Reverse X And Y`**: Changes the X address codes in the program to Y address codes, and changes Y address codes to X address codes.

5.3 Tips and Tricks

The following sections provide insight into efficiently programming your Haas Turning Center.

5.3.1 Tips and Tricks - Programming

Short programs looped many times do not reset the chip conveyor if the intermittent feature is activated. The conveyor continues to start and stop at the commanded times. Refer to page **439** for information on the conveyor interval settings.

The screen displays the spindle and axis loads, the current feed and speed, positions, and the currently active codes while a program runs. Different display modes change the information that is displayed.

To clear all offsets and macro variables, press **[ORIGIN]** at the **Active Work Offset** screen. The control displays a popup menu. Pick **Clear Work Offsets** for the displayed message *Are you sure you want to Zero(Y/N)*. If Y is entered, all the work offsets (macros) in the area being displayed are set to zero. The values in the **Current Commands** display pages can be cleared as well. The Tool Life, Tool Load, and Timer registers are cleared by selecting the one to clear and pressing **[ORIGIN]**. To clear everything in a column, scroll to the top of the column onto the title and press **[ORIGIN]**.

To select another program enter the program number (Onnnnn) and press the arrow up or down. The machine must be in either **Memory** or **Edit** mode. To search for a specific command in a program, use Memory or Edit mode. Enter the address code (A, B, C etc.), or the address code and the value (A1.23), and press the up or down arrow key. If the address code is entered without a value, the search stops at the next use of that letter.

To transfer or save a program in MDI to the list of programs position the cursor at the beginning of the MDI program, enter a program number (Onnnnn), and press **[ALTER]**.

Program Review - Program Review allows the operator to move the cursor and review a copy of the active program on the right side of the display screen, and view the same program as it runs on the left side of the screen. To display a copy of the active program in the **Inactive Program** display, press **[F4]** while the **Edit** pane contains the active program.

Background Edit - This feature edits while a program runs. Press **[EDIT]** until the background **Edit** pane (on the right side of the screen) is active. Select a program to edit from the list and press **[ENTER]**. Press **[SELECT PROGRAM]** from this pane to select another program. Edits are possible as the program runs, however, edits to the running program will not take effect until the program ends with an M30 or **[RESET]**.

Graphics Zoom Window - **[F2]** activates the zoom window when in **Graphics** mode. **[PAGE DOWN]** zooms in and page up expands the view. Use the arrow keys to move the window over the desired area of the part and press **[ENTER]**. Press **[F2]** and **[HOME]** to see full table view.

To Copy Programs - In **Edit** mode, a program can be copied into another program, a line, or a block of lines in a program. Define a block with the **[F2]** key, then move the cursor to the last program line to define, press **[F2]** or **[ENTER]** to highlight the block. Select another program to copy the selection to. Move the cursor to the point where the copied block is moved and press **[INSERT]**.

To Load Files - Select multiple files in the device manager, then press **[F2]** to select a destination.

To Edit Programs - Press **[F4]** while in **Edit** mode to display another version of the current program in the right-hand pane. Different portions of the programs can be edited alternately by pressing **[EDIT]** to switch from one side to the other. The program is updated once switched to the other program.

To Duplicate a Program - An existing program can be duplicated in List Program mode. To do this, select the program number to duplicate, type in a new program number (Onnnnn) and press **[F2]**. This can also be done through the popup help menu. Press **[F1]**, then select the option from the list. Type the new program name and press **[ENTER]**.

Several programs can be sent to the serial port. Highlight the desired programs from the program list to select them and press **[ENTER]**. Press **[SEND]** to transfer the files.

5.3.2 Offsets

To enter offsets:

1. Press **[OFFSET]** to toggle between the **Tool Geometry** and **Work Zero Offset** panes.
2. Press **[ENTER]** to add the entered number to the cursor-selected value.
3. Press **[F1]** to overwrite the cursor selected offset register with the entered number.
4. Press **[F2]** to enter the negative value into the offset.

5.3.3 Settings

The **[HANDLE JOG]** control is used to scroll through settings and tabs, when not in jog mode. Enter a known setting number and press the up or down arrow key to jump to the entered setting.

The Haas control can power off the machine using settings. These settings are: Setting 1 turns off power after machine is idle for nn minutes, and Setting 2 turns off power when M30 is executed.

Memory Lock (Setting 8) when On, memory edit functions are locked out. When Off, memory can be modified.

Dimensioning (Setting 9) changes from **Inch** to **MM**. This changes all offset values too.

Reset Program Pointer (Setting 31) turns on and off the program pointer returning to the program beginning.

Scale Integer F (Setting 77) changes the interpretation of a feed rate. A feed rate can be misinterpreted if there is not a decimal point in the Fnn command. The selections for this setting are **Default**, to recognize a 4 place decimal. Another selection is **Integer** which recognizes a feed rate for a selected decimal position, for a feed rate that does not have a decimal.

Max Corner Rounding (Setting 85) is used to set the corner rounding accuracy required by the user. Any feed rate up to the maximum can be programmed without the errors getting above that setting. The control slows at corners only when needed.

Reset Resets Override (Setting 88) turns on and off the Reset key setting the overrides back to 100%.

Cycle Start/Feed hold (Setting 103) when **On**, **[CYCLE START]** must be pressed and held to run a program. Releasing **[CYCLE START]** generates a Feed Hold condition.

Jog Handle to Single Block (Setting 104) allows the **[HANDLE JOG]** control to be used to step through a program. Reverse the **[HANDLE JOG]** control to generate a Feed Hold condition.

Offset Lock (Setting 119) prevents the operator from altering any of the offsets.

Macro Variable Lock (Setting 120) prevents the operator from altering any of the macro variables.

5.3.4 Operation

[MEMORY LOCK] key switch - prevents the operator from editing programs and from altering settings when in the locked position.

[HOME G28] - Returns all axes to machine zero. To send just one axis to machine home, enter the axis letter and press **[HOME G28]**. To zero out all axes on the **Distance-To-Go** display, while in **Jog** mode, press any other operation mode (**[EDIT]**, **[MEMORY]**, **[MDI/DNC]**, etc.) then press **[HANDLE JOG]**. Each axis can be zeroed independently to show a position relative to the selected zero. To do this go to the **Position Operator** page, press **[HANDLE JOG]**, position the axes to the desired position and press **[ORIGIN]** to zero that display. In addition a number can be entered for the axis position display. To do this, enter an axis and number, for example, `X2.125` then **[ORIGIN]**.

Tool Life - Within the **Current Commands** page there is a **Tool Life** window displaying tool usage. This register counts each time the tool is used. The tool life monitor stops the machine once the tool reaches the value in the alarms column.

Tool Overload - Tool load can be defined by the Tool Load monitor; this changes normal machine operation if it reaches the tool load defined for that tool. When a tool overload condition is encountered, one of four actions occurs depending on Setting 84:

- **Alarm** - Generate an alarm
- **Feedhold** - Stop the feed
- **Beep** - Sounds an audible alarm
- **Autofeed** - Automatically increase or decrease the feed rate

Spindle speed is verified by checking the **Current Commands** **All Active Codes** display (also displayed in the Main Spindle window). Live tooling spindle axis RPM is also displayed on this page.

To select an axis for jogging, enter the axis name on the input line and press **[HANDLE JOG]**.

The Help display has all the G and M codes listed. They are available within the first tab of the Help tabbed menu.

The jogging speeds of 100, 10, 1.0 and 0.1 inches per second can be adjusted by the Feed Rate Override keys. This gives an additional 10% to 200% control.

5.3.5 Calculator

The number in the calculator box can be transferred to the data entry line by pressing **[F3]** in **Edit** or **MDI** mode. This transfers the number from the calculator box to the **Edit** or **MDI** input buffer (enter a letter, X, Z, etc., for the command to use with the number from the calculator).

The highlighted **Triangle**, **Circular**, or **Turning and Tapping** data can be transferred to load, add, subtract, multiply, or divide in the calculator by selecting the value and pressing **[F4]**.

Simple expressions can be entered into the calculator. For example 23*4-5.2+6/2, is evaluated when ENTER is pressed and the result (89.8 in this case) is displayed in the calculator box.

5.4 Basic Programming

A typical CNC program has (3) parts:

1. **Preparation:** This portion of the program selects the work and tool offsets, spindle speed, selects the cutting tool, and turns on the coolant.
2. **Cutting:** This portion of the program defines the tool path, and feed rate for the cutting operation.
3. **Completion:** This portion of the program turns off the coolant, moves the tool to Z-Axis home, moves the tool to X-Axis home, turns off the spindle, and allows the part to be unloaded from the chuck and inspected.

This program makes a 0.100" (2.54 mm) deep face cut in a piece of material with Tool 1 along the X Axis from X = 2.1 to X = - 0.02 (negative 0.02 X-Axis over-travel makes sure the uncompensated tool cuts the whole face).

NOTE: *A program block can contain more than one G-code, as long as those G-codes are from different groups. You cannot place two G-codes from the same group in a program block. Also note that only one M-code per block is allowed.*

```
%
o40001 (BASIC PROGRAM) ;
(G54 X0 is at the center of rotation) ;
(Z0 is on face of the part) ;
(T1 is an end face cutting tool) ;
(BEGIN PREPARATION BLOCKS) ;
```

```
T101 (Select tool and offset 1) ;
G00 G18 G20 G40 G80 G99 (Safe startup) ;
G50 S1000 (Limit spindle to 1000 RPM) ;
G97 S500 M03 (CSS off, Spindle on CW) ;
G00 G54 X2.1 Z0.1 (Rapid to 1st position) ;
M08 (Coolant on) ;
G96 S200 (CSS on) ;
(BEGIN CUTTING BLOCKS) ;
G01 Z-0.1 F.01 (Linear feed) ;
X-0.02 (Linear feed) ;
(BEGIN COMPLETION BLOCKS) ;
G00 Z0.1 M09 (Rapid retract, coolant off) ;
G97 S500 (CSS off) ;
G53 X0 (X home) ;
G53 Z0 M05 (Z home, spindle off) ;
M30 (End program) ;
%
```

5.4.1 Preparation

These are the preparation code blocks in the sample program:

Preparation Code Block	Description
`%`	Denotes the beginning of a program written in a text editor.
`O40001 (BASIC PROGRAM) ;`	`O40001` is the name of the program. Program naming convention follows the `Onnnnn` format: The letter “O”, or “o” followed by a 5-digit number.
`(G54 X0 is at the center of rotation) ;`	Comment
`(Z0 is on face of the part) ;`	Comment
`(T1 is an end face cutting tool) ;`	Comment
`T101 (Select tool and offset 1) ;`	`T101` selects the tool, the offset 1, and commands the tool change to Tool 1.

Preparation Code Block	Description
`G00 G18 G20 G40 G80 G99 (Safe startup) ;`	This is referred to as a safe startup line. It is good machining practice to place this block of code after every tool change. `G00` defines axis movement following it to be in Rapid Motion mode. `G18` defines the cutting plane as the XZ plane. `G20` defines the coordinate positioning to be in Inches. `G40` cancels Cutter Compensation. `G80` cancels any canned cycles. `G99` puts the machine in Feed per Rev mode.
`G50 S1000 (Limit spindle to 1000 RPM) ;`	`G50` limits the spindle to a max of 1000 RPM. `S1000` is the spindle speed address. Using `Snnnn` address code, where `nnnn` is the desired spindle RPM value.
`G97 S500 M03 (CSS off, Spindle on CW) ;`	`G97` cancels constant surface speed (CSS) making the S value a direct RPM of 500. `S500` is the spindle speed address. Using `Snnnn` address code, where `nnnn` is the desired spindle RPM value. `M03` turns on the spindle. ***NOTE:*** *Lathes equipped with a gearbox, the control will not select high gear or low gear for you. You must use a `M41` Low Gear or `M42` High Gear on the line before the `Snnnn` code. Refer to M41 / M42 Low / High Gear Override for more information on these M-codes.*
`G00 G54 X2.1 Z0.1 (Rapid to 1st position) ;`	`G00` defines axis movement following it to be in Rapid Motion mode. `G54` defines the coordinate system to be centered on the Work Offset stored in `G54` on the **`Offset`** display. `X2.0` commands the X Axis to X = 2.0. `Z0.1` commands the Z Axis to Z = 0.1.
`M08 (Coolant on) ;`	`M08` turns on the coolant.
`G96 S200 (CSS on) ;`	`G96` turns on CSS. `S200` specifies a cutting speed of 200 ipm to be used along with the current diameter to calculate the correct RPM.

5.4.2 Cutting

These are the cutting code blocks in the sample program:

Cutting Code Block	Description
`G01 Z-0.1 F.01 (Linear feed) ;`	`G01` defines axis movements after it to be in a straight line. `Z-0.1` commands the Z Axis to Z = -0.1. `G01` requires address code `Fnnn.nnnn`. `F.01` specifies the feedrate for the motion is .0100" (.254 mm)/Rev.
`X-0.02 (Linear feed) ;`	`X-0.02` commands the X Axis to X = -0.02.

5.4.3 Completion

These are the completion code blocks in the sample program:

Completion Code Block	Description
`G00 Z0.1 M09 (Rapid retract, coolant off) ;`	`G00` commands the axis motion to be completed in Rapid Motion mode. `Z0.1` commands the Z Axis to Z = 0.1. `M09` turns off the coolant.
`G97 S500 (CSS off) ;`	`G97` cancels constant surface speed (CSS) making the S value a direct RPM of 500. On machines with a gearbox, the control automatically selects high gear or low gear, based on the commanded spindle speed. `S500` is the spindle speed address. Using `Snnnn` address code, where `nnnn` is the desired spindle RPM value.
`G53 X0 (X home) ;`	`G53` defines axis movements after it to be with respect to the machine coordinate system. `X0` commands the X Axis to move to X = 0.0 (X home).
`G53 Z0 M05 (Z home, spindle off) ;`	`G53` defines axis movements after it to be with respect to the machine coordinate system. `Z0` commands the Z Axis to move to Z = 0.0 (Z home). `M05` turns off the spindle.
`M30 (End program) ;`	`M30` ends the program and moves the cursor on the control to the top of the program.
`%`	Denotes the end of a program written in a text editor.

5.4.4 Absolute vs. Incremental (XYZ vs. UVW)

Absolute (XYZ) and incremental positioning (UVW) define how the control interprets axis motion commands.

When you command axis motion using `X`, `Y`, or `Z`, the axes move to that position relative to the origin of the coordinate system currently in use.

When you command axis motion using `U(X)`, `V(Y)`, or `W(Z)`, the axes move to that position relative to the current position.

Absolute programming is useful in most situations. Incremental programming is more efficient for repetitive, equally spaced cuts.

5.5 Miscellaneous Codes

This section lists frequently used M-codes. Most programs have at least one M-code from each of the following families.

Refer to the M-code section of this manual, starting on page **391**, for a list of all M-codes with descriptions.

NOTE: *You can use only one M-code on each line of the program.*

5.5.1 Tool Functions

The `Tnnoo` code selects the next tool (`nn`) and offset (`oo`).

FANUC Coordinate System

T-codes have the format `Txxyy` where `xx` specifies the tool number from 1 to the maximum number of stations on the turret; and `yy` specifies the tool geometry and tool wear indices from 1 to 50. The tool geometry **x** and **z** values are added to the work offsets. If tool nose compensation is used, `yy` specifies the tool geometry index for radius, taper, and tip. If `yy` = 00 no tool geometry or wear is applied.

Tool Offsets Applied by FANUC

Setting a negative tool wear in the tool wear offsets moves the tool further in the negative direction of the axis. Thus, for O.D. turning and facing, setting a negative offset in the X-axis results in a smaller diameter part and setting a negative value in the Z-axis results in more material being taken off the face.

NOTE: *There is no X or Z motion required prior to performing a tool change and it wastes time in most cases to return X or Z to the home position. However, you must position X or Z to a safe location prior to a tool change in order to prevent a crash between the tools and the fixture or part.*

Low air pressure or insufficient volume reduces the pressure applied to the turret clamp/unclamp piston and slows down the turret index time or does not unclamp the turret.

To load or change tools:

1. Press **[POWER UP/RESTART]** or **[ZERO RETURN]** and then **[ALL]**.
   The control moves the tool turret to a normal position.
2. Press **[MDI/DNC]** to toggle to MDI mode.
3. Press **[TURRET FWD]** or **[TURRET REV]**.
   The machine indexes the turret to the next tool position.
   Shows the current tool in the **`Active Tool`** window in the lower right of the display.
4. Press **[CURRENT COMMANDS]**.
   Shows the current tool in the **`Active Tool`** display in the upper right of the screen.

5.5.2 Spindle Commands

There are (3) primary spindle M-code commands:

- `M03` commands the spindle to turn in the forward direction.
- `M04` commands the spindle to turn in the reverse direction.

NOTE: *You can command the spindle speed with an `Snnnn` address code, where `nnnn` specifies the speed in rpm, but overrides from `G50`, `G96`, or `G97` may apply to the actual spindle speed.*

- `M05` commands the spindle to stop.

NOTE: *When you command an M05, the control waits for the spindle to stop before the program continues.*

5.5.3 Program Stop Commands

There are (2) main M-codes and (1) subprogram M-code to denote the end of a program or subprogram:

- M30 - Program End and Rewind ends the program and resets to the beginning of the program. This is the most common way to end a program.
- M02 - Program End ends the program and remains at the location of the M02 block of code in the program.
- M99 - Subprogram Return or Loop exits the subprogram and resumes the program that called it.

NOTE: *If your subprogram does not end with M99, the control gives Alarm 312 – Program End.*

5.5.4 Coolant Commands

Use M08 to command standard coolant on. Use M09 to command standard coolant off. Refer to page **395** for more information on these M-codes.

If your machine has High-Pressure Coolant (HPC), use M88 to command it on, and M89 to command it off.

5.6 Cutting G-codes

The main cutting G-codes are categorized into interpolation motion and canned cycles. Interpolation motion cutting codes are broken down into:

- G01 - Linear Interpolation Motion
- G02 - Clockwise Circular Interpolation Motion
- G03 - Counter-Clockwise Circular Interpolation Motion

5.6.1 Linear Interpolation Motion

G01 Linear Interpolation Motion is used to cut straight lines. It requires a feedrate, specified with the Fnnn.nnnn address code. Xnn.nnnn, Ynn.nnnn, Znn.nnnn, and Annn.nnn are optional address codes to specify cut. Subsequent axis motion commands will use the feed rate specified by G01 until another axis motion, G00, G02, G03, G12, or G13 is commanded.

Corners can be chamfered using the optional argument Cnn.nnnn to define the chamfer. Corners can be rounded using the optional address code Rnn.nnnn to define the radius of the arc. Refer to page **9** for more information on G01.

5.6.2 Circular Interpolation Motion

G02 and G03 are the G-codes for circular cutting motions. Circular Interpolation Motion has several optional address codes to define the arc or circle. The arc or circle begins cutting from the current cutter position [1] to the geometry specified within the G02/ G03 command.

Arcs can be defined using two different methods. The preferred method is to define the center of the arc or circle with I, J and/or K and to define the end point [3] of the arc with an X, Y and/or Z. The I J K values define the relative X Y Z distances from the starting point [2] to the center of the circle. The X Y Z values define the absolute X Y Z distances from the starting point to the end point of the arc within the current coordinate system. This is also the only method to cut a circle. Defining only the I J K values and not defining the end point X Y Z values will cut a circle.

The other method to cut an arc is to define the X Y Z values for the end point and to define the radius of the circle with an R value.

Below are examples of using the two different methods to cut a 2" (or 2 mm) radius, 180 degree, counter-clockwise arc. The tool starts at X0 Y0 [1], moves to the starting point of the arc [2], and cuts the arc to the end point [3]:

F5.6: Arc Cutting Example

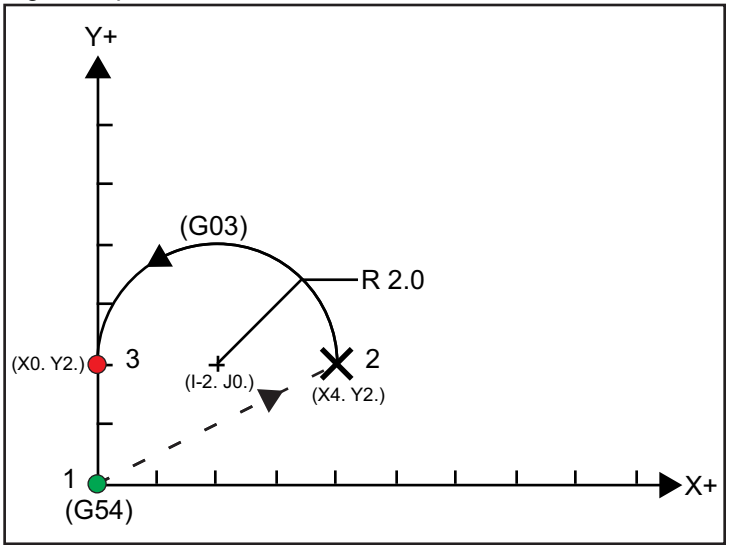

Method 1:

```
%
T01 M06 ;
```

```
...
G00 X4. Y2. ;
G01 F20.0 Z-0.1 ;
G03 F20.0 I-2.0 J0. X0. Y2. ;
...
M30 ;
%
```

Method 2:

```
%
T01 M06 ;
...
G00 X4. Y2. ;
G01 F20.0 Z-0.1 ;
G03 F20.0 X0. Y2. R2. ;
...M30 ;
%
```

Below is an example of how to cut a 2" (or 2 mm) radius circle:

```
%
T01 M06 ;
...
G00 X4. Y2. ;
G01 F20.0 Z-0.1 ;
G02 F20.0 I2.0 J0. ;
...
M30 ;
%
```

5.7 Tool Nose Compensation

Tool Nose Compensation (TNC) is a feature that lets you adjust a programmed tool path in for different cutter sizes, or for normal cutter wear. With TNC. you only need to enter minimal offset data when you run a program. You do not need to do additional programming.

5.7.1 Tool Nose Compensation - Programming

Tool Nose Compensation is used when the tool nose radius changes, and cutter wear is to be accounted for with curved surfaces or tapered cuts. Tool Nose Compensation generally does not need to be used when programmed cuts are solely along the X- or Z-axis. For taper and circular cuts, as the tool nose radius changes, under or overcutting can occur. In the figure, suppose that immediately after setup, `C1` is the radius of the cutter that cuts the programmed tool path. As the cutter wears to `C2`, the operator might adjust the tool geometry offset to bring the part length and diameter to dimension. If this were done, a smaller radius would occur. If tool nose compensation is used, a correct cut is achieved. The control automatically adjusts the programmed path based on the offset for tool nose radius as set up in the control. The control alters or generates code to cut the proper part geometry.

F5.7: Cutting path without tool nose compensation: [1] Tool Path, [2] Cut after wear [3] Desired cut.

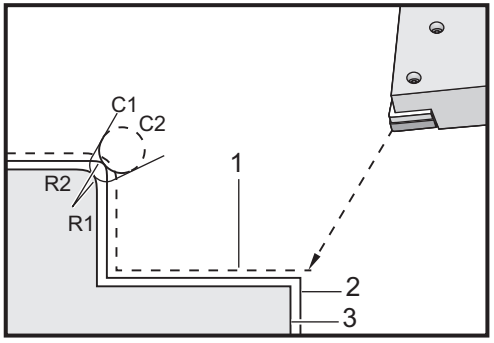

F5.8: Cutting path with tool nose compensation: [1] Compensated tool path, [2] Desired cut and programmed tool path.

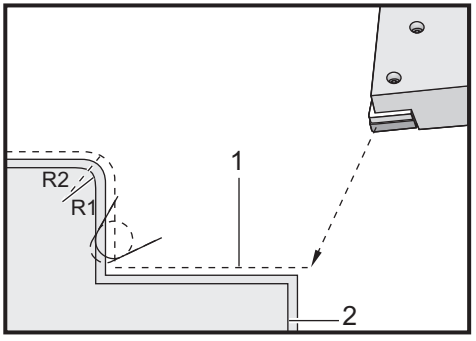

NOTE: *The second programmed path coincides with the final part dimension. Although parts do not have to be programmed using tool nose compensation, it is the preferred method because it makes program problems easier to detect and resolve.*

5.7.2 Tool Nose Compensation Concept

Tool nose compensation works by shifting the Programmed Tool Path to the right or to the left. The programmer usually programs the tool path to the finished size. When tool nose compensation is used, the control compensates for the radius of the tool based on special instructions written into the program. Two G-code commands are used to do this for compensation within a two-dimensional plane. `G41` commands the control to shift to the left of the programmed tool path, and `G42` commands the control to shift to the right of the programmed tool path. Another command, `G40`, is provided to cancel any shift made by tool nose compensation.

F5.9: TNC Shift Direction: [1] Toolpath relative to the workpiece, [2] Programmed toolpath.

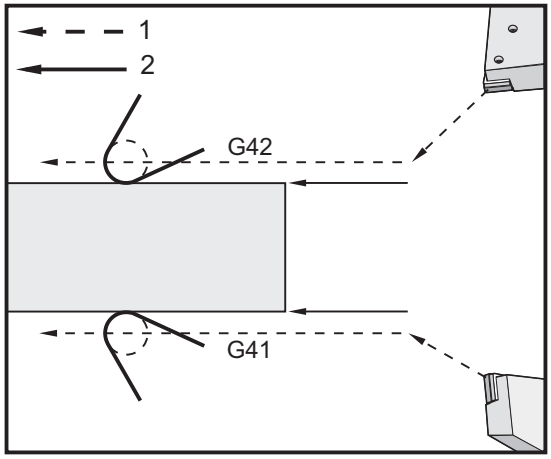

The shift direction is based on the direction of the tool movement relative to the tool and which side of the part it is on. When thinking about which direction the compensated shift occurs in tool nose compensation, imagine looking down the tool tip and steering the tool. Commanding `G41` moves the tool tip to the left and `G42` moves the tool tip to the right. This means that normal O.D. turning requires `G42` for correct tool compensation, while normal I.D. turning requires `G41`.

F5.10: Imaginary tool tip: [1] Tool nose radius, [2] Imaginary tool tip.

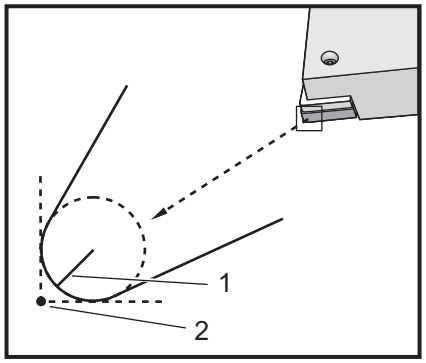

Tool nose compensation assumes that a compensated tool has a radius at the tool tip that it must compensate for. This is called the Tool Nose Radius. Since it is difficult to determine exactly where the center of this radius is, a tool is usually set up using what is called the Imaginary Tool Tip. The control also needs to know which direction the tool tip is relative to the center of the tool nose radius, or the Tip direction. The tip direction should be specified for each tool.

The first compensated move is generally a move from a non-compensated position to a compensated position and is therefore unusual. This first move is called the Approach move and is required when using tool nose compensation. Similarly, a Depart move is required. In a Depart move, the control moves from a compensated position to a non-compensated position. A Depart move occurs when tool nose compensation is canceled with a `G40` command or `Txx00` command. Although Approach and Depart moves can be precisely planned, they are generally uncontrolled moves and the tool should not be in contact with the part when they occur.

5.7.3 Using Tool Nose Compensation

The following steps are used to program a part using TNC:

1. **Program** the part to finished dimensions.
2. **Approach and Departure** – Ensure that there is an approach move for each compensated path and determine which direction (`G41` or `G42`) is used. Ensure that there is also a departure move for each compensated path.
3. **Tool Nose Radius and Wear** – Select a standard insert (tool with radius) to be used for each tool. Set the tool nose radius of each compensated tool. Clear the corresponding tool nose wear offset to zero for each tool.
4. **Tool Tip Direction** – Input the tool tip direction for each tool that is using compensation, `G41` or `G42`.
5. **Tool Geometry Offset**– Set the tool length geometry and clear the length wear offsets of each tool.

6. **Check Compensation Geometry** – Debug the program in graphics mode and correct any tool nose compensation geometry problems that may occur. A problem can be detected in two ways: an alarm is generated indicating compensation interference, or the incorrect geometry is seen generated in graphics mode.
7. **Run and Inspect First Article** – Adjust compensated wear for the setup part.

5.7.4 Approach and Departure Moves For TNC

The first X or Z motion in the same line that contains a `G41` or `G42` is called the Approach move. The approach must be a linear move, that is a `G01` or `G00`. The first move is not compensated, yet at the end of the approach move the machine position is fully compensated. See the following figure.

F5.11: TNC Approach and Depart Moves: [1] Compensated Path, [2] Programmed path.

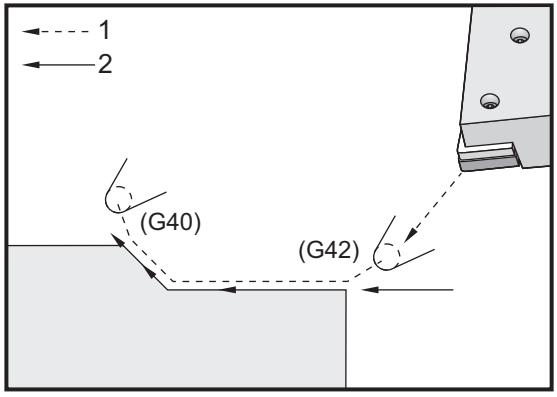

Any line of code with a `G40` cancels tool nose compensation and is called the Departure move. The departure must be a linear move, that is a `G01` or `G00`. The start of a departure move is fully compensated; the position at this point is at a right angle to the last programmed block. At the end of the departure move the machine position is not compensated. See the previous figure.

The following figure shows the condition just prior to canceling tool nose compensation. Some geometries result in over or undercutting of the part. This is controlled by including an `I` and `K` address code in the `G40` cancellation block. The `I` and `K` in a `G40` block define a vector that is used to determine the compensated target position of the previous block. The vector is usually aligned with an edge or wall of the completed part. The following figure shows how `I` and `K` correct undesired cutting in a departure move.

F5.12: TNC Use of I and K in G40 Block: [1] Overcut.

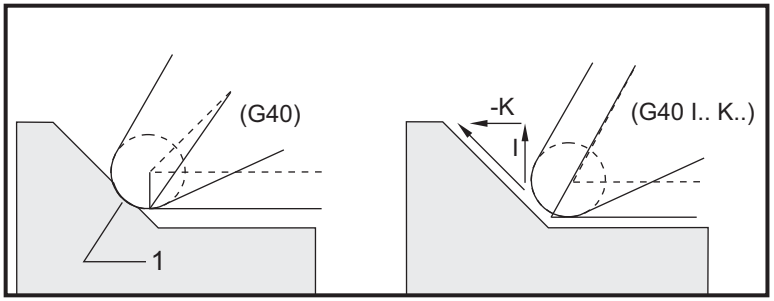

5.7.5 Tool Nose Radius and Wear Offset

Each turning tool that uses tool nose compensation requires a Tool Nose Radius. The tool tip (tool nose radius) specifies how much the control is to compensate for a given tool. If standard inserts are being used for the tool, then the tool nose radius is simply the tool tip radius of the insert.

Associated with each tool on the geometry offsets page is a Tool Nose Radius Offset. The column labeled **Radius** contains the value for the tool nose radius of each tool. If the value of any tool nose radius offset is set to zero, no compensation is generated for that tool.

Associated with each radius offset is a Radius Wear Offset, located on the **Wear Offset** page. The control adds the wear offset to the radius offset to obtain an effective radius that is used for generating compensated values.

Small adjustments (positive values) to the radius offset during production runs should be placed in the wear offset page. This allows the operator to easily track the wear for a given tool. As a tool is used, the insert generally wears so that there is a larger radius at the end of the tool. When replacing a worn tool with a new one, clear the wear offset to zero.

It is important to remember that tool nose compensation values are in terms of radius rather than diameter. This is important when tool nose compensation is canceled. If the incremental distance of a compensated departure move is not twice the radius of the cutting tool, overcutting occurs. Always remember that programmed paths are in terms of diameter and allow for twice the tool radius on departure moves. The Q block of canned cycles that require a PQ sequence is often a departure move. The following example illustrates how incorrect programming results in overcutting.

Preparation:

Tool Geometry	X	Z	Radius	Tip
8	-8.0000	-8.00000	.0160	2

Example:

```
%
o30411 (TOOL NOSE RADIUS AND WEAR OFFSET) ;
(G54 X0 is at the center of rotation) ;
(Z0 is on the face of the part) ;
(T1 is a boring bar) ;
(BEGIN PREPARATION BLOCKS) ;
T101 (Select tool and offset 1) ;
G00 G18 G20 G40 G80 G99 (Safe startup) ;
G50 S1000 (Limit spindle to 1000 RPM) ;
G97 S500 M03 (CSS off, Spindle on CW) ;
G00 G54 X0.49 Z0.05 (Rapid to 1st position) ;
M08 (Coolant on) ;
(BEGIN CUTTING BLOCKS) ;
G96 S750 (CSS on) ;
G41 G01 X.5156 F.004 (TNC left on) ;
Z-.05 (Linear feed) ;
X.3438 Z-.25 (Linear feed) ;
Z-.5 (Linear feed) ;
X.33 (Linear feed) ;
G40 G00 X0.25 (TNC off, exit line) ;
(BEGIN COMPLETION BLOCKS) ;
G00 Z0.1 M09 (Rapid retract, coolant off) ;
G53 X0 (X home) ;
G53 Z0 M05 (Z home, spindle off) ;
M30 (End program) ;
%
```

F5.13: TNC Departure Cutting Error

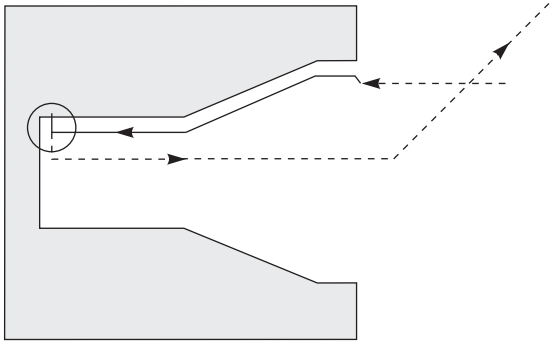

5.7.6 Tool Nose Compensation and Tool Length Geometry

You set up the length geometries for tools that use tool nose compensation in the same way that you set up tools that do not use compensation.

Refer to page **128** for details on touching off tools and recording tool length geometries. When you set up a new tool, be sure to clear the geometry wear to zero.

If you command particularly heavy cuts on one edge of a tool, the tool can wear unevenly. In this case. adjust the **`X or Z Geometry Wear`** instead of the **`Radius Wear`**. You can often adjust X or Z length geometry wear to compensate for uneven tool nose wear. Length geometry wear shifts all dimensions for a single axis.

The program design may not let you use length geometry shift to compensate for wear. To determine which wear to adjust, check several X and Z dimensions on a finished part. Wear that is even results in similar dimensional changes on the X and Z axes, and suggests that you should increase the radius wear offset. Wear that affects the dimensions on one axis only suggests length geometry wear.

Good program design based on the geometry of the part should eliminate uneven wear problems. Generally, rely on finishing tools that use the entire radius of the cutter for tool nose compensation.

5.7.7 Tool Nose Compensation in Canned Cycles

Some canned cycles ignore tool nose compensation, expect a specific coding structure, or perform their own specific canned cycle activity (also refer to page **302** for more information on using canned cycles).

The following canned cycles ignore tool nose radius compensation. Cancel tool nose compensation before any of these canned cycles:

- `G74` End face grooving cycle, peck drilling
- `G75` O.D./I.D. grooving cycle, peck drilling
- `G76` Thread cutting cycle, multiple pass
- `G92` Thread cutting cycle, modal

5.7.8 Example Programs Using Tool Nose Compensation

This section gives several examples of programs that use Tool Nose Compensation.

Example 1: TNC Standard Interpolation Modes G01/G02/G03

This example of general TNC uses standard interpolation modes G01/G02/G03.

F5.14: TNC Standard Interpolation G01, G02, and G03

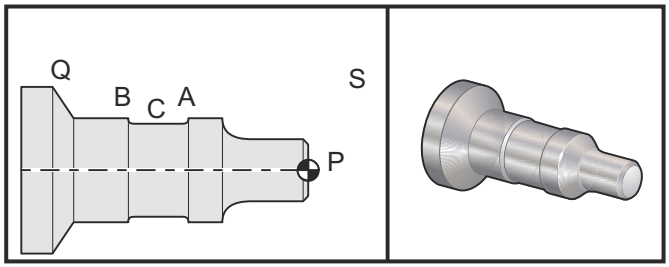

Preparation

- Set up these tools:
  T1 Insert with .0312 radius, roughing

  T2 Insert with .0312 radius, finishing

  T3 .250 wide grooving tool with .016 radius/same tool for offsets 3 and 13

Tool	Offset	X	Z	Radius	Tip
T1	01	-8.9650	-12.8470	.0312	3
T2	02	-8.9010	-12.8450	.0312	3
T3	03	-8.8400	-12.8380	.016	3
T3	13	-8.8400	-12.588	.016	4

```
O30421 (TNC STANDARD INTERPOLATION G01/G02/G03) ;
(G54 X0 is at the center of rotation) ;
(Z0 is on the face of the part) ;
(T1 is an rough OD tool) ;
(T2 is a finish OD tool) ;
(T3 is a groove tool) ;
(T1 PREPARATION BLOCKS) ;
T101 (Select tool and offset 1) ;
G00 G18 G20 G40 G80 G99 (Safe startup) ;
G50 S1000 (Limit spindle to 1000 RPM) ;
G97 S500 M03 (CSS off, Spindle on CW) ;
G00 G54 X2.1 Z0.1 (Rapid to position S) ;
M08 (Coolant on) ;
```

```
G96 S200 (CSS on) ;
(T1 CUTTING BLOCKS) ;
G71 P1 Q2 U0.02 W0.005 D.1 F0.015 (Begin G71) ;
N1 G42 G00 X0. Z0.1 F.01 (P1 - TNC on) ;
G01 Z0 F.005 (Begin toolpath) ;
X0.65 (Linear feed) ;
X0.75 Z-0.05 (Linear feed) ;
Z-0.75 (Linear feed) ;
G02 X1.25 Z-1. R0.25 (Feed CW) ;
G01 Z-1.5 (Linear feed to position A) ;
G02 X1. Z-1.625 R0.125 (Feed CW) ;
G01 Z-2.5 (Linear feed) ;
G02 X1.25 Z-2.625 R0.125 (Feed CW to position B) ;
G01 Z-3.5 (Linear feed) ;
X2. Z-3.75 (End of toolpath) ;
N2 G00 G40 X2.1 (Q2 - TNC off) ;
(T1 COMPLETION BLOCKS) ;
G97 S500 (CSS off) ;
G53 X0 M09 (X home, coolant off) ;
G53 Z0 (Z home, clear for tool change) ;
M01 (Optional program stop) ;
(T2 PREPARATION BLOCKS) ;
T202 (T2 is a finish OD tool) ;
G00 G18 G20 G40 G80 G99 (Safe startup) ;
G50 S1000 (Limit spindle to 1000 RPM) ;
G97 S500 M03 (CSS off, Spindle on CW) ;
G00 G54 X2.1 Z0.1 (Rapid to position S) ;
M08 (Coolant on) ;
G96 S200 (CSS on) ;
(T2 CUTTING BLOCKS) ;
G70 P1 Q2 (Finish P1 - Q2 using T2, G70 and TNC) ;
(T2 COMPLETION BLOCKS) ;
G97 S500 (CSS off) ;
G53 X0 M09 (X home, coolant off) ;
G53 Z0 (Z home, clear for tool change) ;
M01 (Optional program stop) ;
(T3 PREPARATION BLOCKS) ;
T303 (T3 is a groove tool) ;
G00 G18 G20 G40 G80 G99 (Safe startup) ;
G97 S500 M03 (CSS off, Spindle on CW) ;
G54 G42 X1.5 Z-2.0 (TNC on, rapid to point C) ;
M08 (Coolant on) ;
G96 S200 (CSS on) ;
(T3 CUTTING BLOCKS) ;
G01 X1. F0.003 (Linear feed) ;
G01 Z-2.5 (Linear feed) ;
G02 X1.25 Z-2.625 R0.125 (Feed CW to position B) ;
```

```
G01 G40 X1.5 (TNC off) ;
T313 (Change offset to other side of insert) ;
G00 G41 X1.5 Z-2.125 (TNC left on) ;
G01 X1. F0.003 (Linear feed) ;
G01 Z-1.625 (Linear feed) ;
G03 X1.25 Z-1.5 R0.125 (Feed CCW to position A) ;
(T3 COMPLETION BLOCKS) ;
G00 G40 X1.6 M09 (TNC off, coolant off) ;
G97 S500 (CSS off) ;
G53 X0 (X home) ;
G53 Z0 M05 (Z home, spindle off) ;
M30 ;
```

NOTE: *The suggested template of the previous section for `G70` is used. Also note that compensation is enabled in the `PQ` sequence but is canceled after `G70` is completed.*

Example 2: TNC with a G71 Roughing Canned Cycle

This example uses TNC with a `G71` roughing canned cycle.

F5.15: TNC `G71` Roughing Canned Cycle

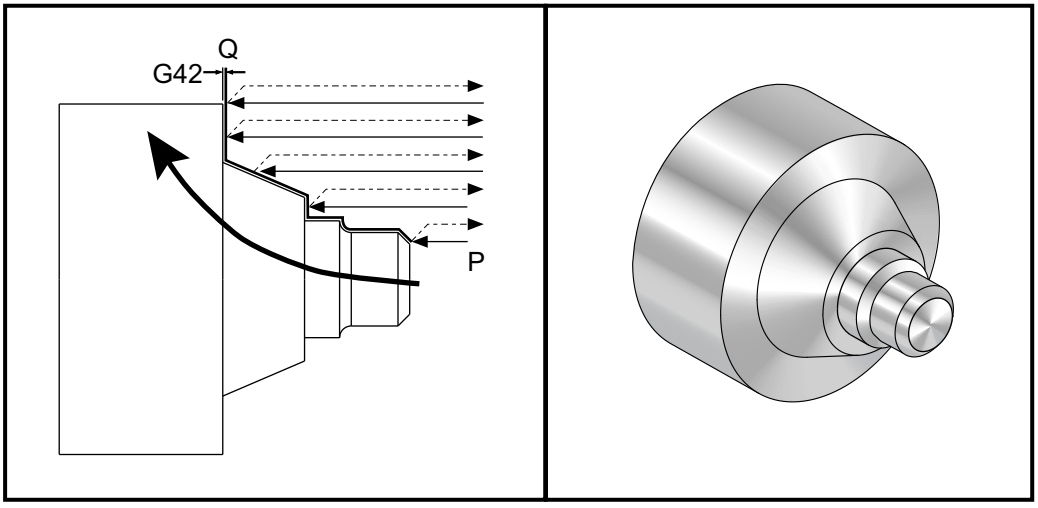

Preparation:

- Tools:
  T1 Insert with 0.032 radius, roughing

Tool	Offset	Radius	Tip
T1	01	.032	3

```
o30711 (TNC WITH A G71 ROUGHING CYCLE) ;
(G54 X0 is at the center of rotation) ;
(Z0 is on the face of the part) ;
(T1 is an OD cutting tool) ;
(BEGIN PREPARATION BLOCKS) ;
T101 (Select tool and offset 1) ;
G00 G18 G20 G40 G80 G99 (Safe startup) ;
G50 S1000 (Limit spindle to 1000 RPM) ;
G97 S500 M03 (CSS off, Spindle on CW) ;
G00 G54 X3.0 Z0.1 (Rapid to 1st position) ;
M08 (Coolant on) ;
(BEGIN CUTTING BLOCKS) ;
G96 S200 (CSS on) ;
G71 P1 Q2 U.01 W.005 D.08 F.012 (Begin G71) ;
N1 G42 G00 X0.6 (P1 - TNC on) ;
G01 Z0 F0.01 (Begin toolpath) ;
X0.8 Z-0.1 F0.005 (45 deg. Chamfer) ;Z-0.5 (Linear feed) ;
G02 X1.0 Z-0.6 I0.1 (Feed CW) ;
G01 Z-0.9 (Linear feed) ;
X1.4 (Linear feed) ;
X2.0 Z-1.6 (23 deg. Taper) ;
G01 X3. (End of toolpath) ;
N2 G00 G40 X4. (Q2 - TNC off) ;
(BEGIN COMPLETION BLOCKS) ;
G97 S500 (CSS off) ;
G53 X0 M09 (X home, coolant off) ;
G53 Z0 M05 (Z home, spindle off) ;
M30 (End program) ;
```

NOTE: *This part is a `G71` Type I path. When using TNC it is very unusual to have a Type II path, as the compensation methods can only compensate the tool tip in one direction.*

Example 3: TNC with a G72 Roughing Canned Cycle

This example is TNC with a G72 roughing canned cycle. G72 is used instead of G71 because the roughing strokes in X are longer than the Z roughing strokes of a G71. It is therefore more efficient to use G72.

F5.16: TNC G72 Roughing Canned Cycle

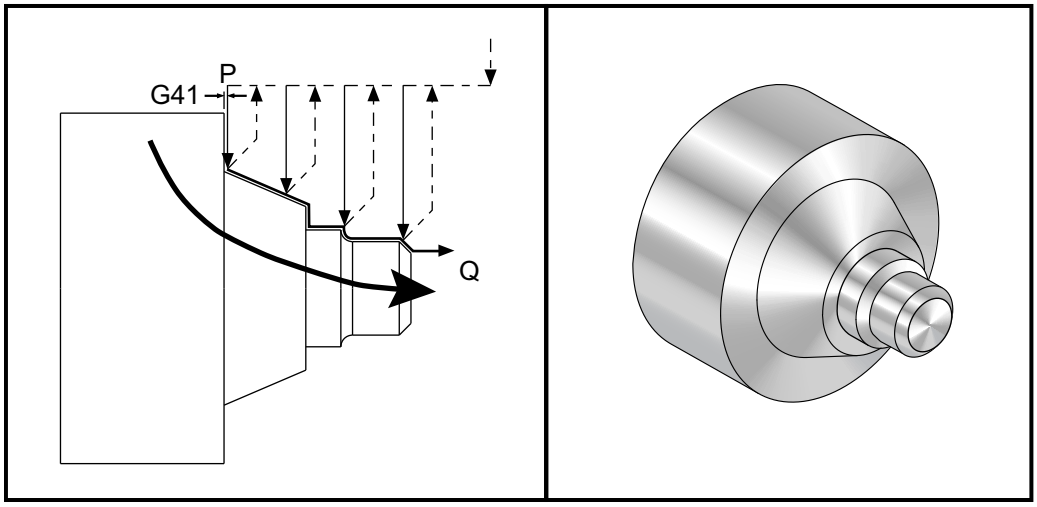


```
o30721 (TNC WITH A G72 ROUGHING CYCLE) ;
(G54 X0 is at the center of rotation) ;
(Z0 is on the face of the part) ;
(T1 is an OD cutting tool) ;
(BEGIN PREPARATION BLOCKS) ;
T101 (Select tool and offset 1) ;
G00 G18 G20 G40 G80 G99 (Safe startup) ;
G50 S1000 (Limit spindle to 1000 RPM) ;
G97 S500 M03 (CSS off, Spindle on CW) ;
G00 G54 X3.1 Z0 (Rapid to 1st position) ;
M08 (Coolant on) ;
(BEGIN CUTTING BLOCKS) ;
G96 S200 (CSS on) ;
G72 P1 Q2 U.01 W.005 D.08 F.012 (Begin G72) ;
N1 G41 G00 Z-1.6 (P1 - TNC on) ;
G01 X2. F0.01 (Begin toolpath) ;
X1.4 Z-0.9  (Taper) ;
X1. (Linear feed) ;
Z-0.6 (Linear feed) ;
G03 X0.8 Z-0.5 R0.1 (Feed CCW) ;
G01 Z-0.1 (Linear feed) ;
X0.7 Z0 (Chamfer, End of toolpath) ;
N2 G00 G40 Z0.1 (Q2 - TNC off) ;
```

```
(BEGIN COMPLETION BLOCKS) ;
G97 S500 (CSS off) ;
G53 X0 M09 (X home, coolant off) ;
G53 Z0 M05 (Z home, spindle off) ;
M30 (End program) ;
```

Example 4: TNC with G73 Roughing Canned Cycle

This example is TNC with a G73 roughing canned cycle. G73 is best used when you want to remove a consistent amount of material in both the X and Z axes.

F5.17: TNC G73 Roughing Canned Cycle

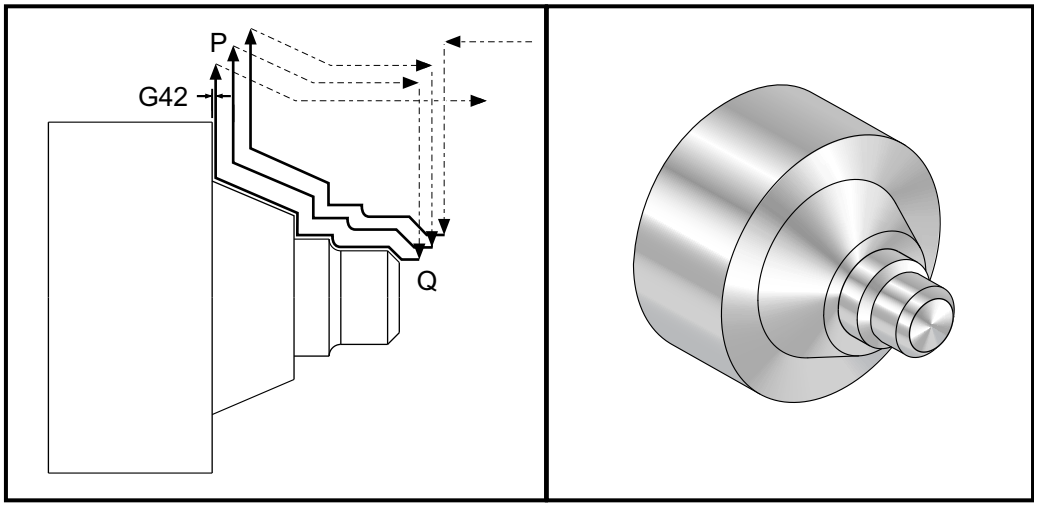


```
o30731 (TNC WITH A G73 ROUGHING CYCLE) ;
(G54 X0 is at the center of rotation) ;
(Z0 is on the face of the part) ;
(T1 is an OD cutting tool) ;
(BEGIN PREPARATION BLOCKS) ;
T101 (Select tool and offset 1) ;
G00 G18 G20 G40 G80 G99 (Safe startup) ;
G50 S1000 (Limit spindle to 1000 RPM) ;
G97 S500 M03 (CSS off, Spindle on CW) ;
G00 G54 X3.0 Z0.1 (Rapid to 1st position) ;
M08 (Coolant on) ;
(BEGIN CUTTING BLOCKS) ;
G96 S200 (CSS on) ;
G73 P1 Q2 U.01 W.005 I0.3 K0.15 D3 F.012 (Begin G73) ;
N1 G42 G00 X0.6 (P1- TNC on) ;
G01 Z0 F0.01 (Begin toolpath) ;
X0.8 Z-0.1 F0.005 (Chamfer) ;
```

```
Z-0.5 (Linear feed) ;
G02 X1.0 Z-0.6 I0.1 (Feed CW) ;
G01 Z-0.9 (Linear feed) ;
X1.4 (Linear feed) ;
X2.0 Z-1.6 (Taper) ;
G01 X3. (End of toolpath) ;
N2 G00 G40 X4. (Q2 - TNC off) ;
(BEGIN COMPLETION BLOCKS) ;
G97 S500 (CSS off) ;
G53 X0 M09 (X home, coolant off) ;
G53 Z0 M05 (Z home, spindle off) ;
M30 (End program) ;
```

Example 5: TNC with G90 Modal Rough Turning Cycle

This example is TNC with a G90 modal rough turning cycle.

F5.18: TNC With G90 Rough Turning Cycle

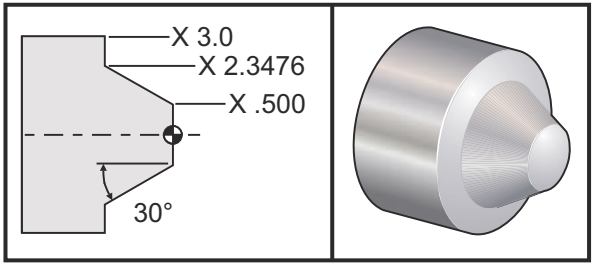

Operation	Tool	Offset	Tool Nose Radius	Tip
roughing	T1	01	0.032	3

```
o30901 (TNC WITH A G90 ROUGHING CYCLE) ;
(G54 X0 is at the center of rotation) ;
(Z0 is on face of the part) ;
(T1 is an OD cutting tool) ;
(BEGIN PREPARATION BLOCKS) ;
T101 (Select tool and offset 1) ;
G00 G18 G20 G40 G80 G99 (Safe startup) ;
G50 S1000 (Limit spindle to 1000 RPM) ;
G97 S500 M03 (CSS off, Spindle on CW) ;
G00 G54 X4.0 Z0.1 (Rapid to 1st position) ;
```

```
M08 (Coolant on) ;
G96 S200 (CSS on) ;
(BEGIN CUTTING BLOCKS);
G90 G42 X2.55 Z-1.5 I-0.9238 F0.012 (Begin G90) ;
X2.45 (Optional additional pass) ;
X2.3476 (Optional additional pass) ;
(BEGIN COMPLETION BLOCKS) ;
G00 G40 X3.0 Z0.1 M09 (TNC off, coolant off) ;
G97 S500 (CSS off) ;
G53 X0 (X home) ;
G53 Z0 M05 (Z home, spindle off) ;
M30 (End program) ;
```

Example 6: TNC with G94 Modal Rough Turning Cycle

This example is TNC with a `G94` modal rough turning cycle.

F5.19: TNC `G94` Rough Turning Cycle

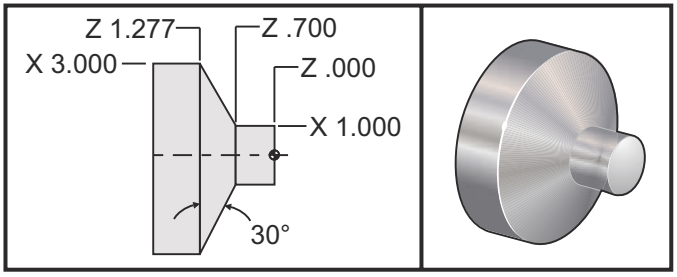

Operation	Tool	Offset	Tool Nose Radius	Tip
roughing	T1	01	0.032	3

```
o30941 (TNC WITH G94 MODAL TURNING CYCLE) ;
(G54 X0 is at the center of rotation) ;
(Z0 is on face of the part) ;
(T1 is an OD cutting tool) ;
(BEGIN PREPARATION BLOCKS) ;
T101 (Select tool and offset 1) ;
G00 G18 G20 G40 G80 G99 (Safe startup) ;
G50 S1000 (Limit spindle to 1000 RPM) ;
G97 S500 M03 (CSS off, Spindle on CW) ;
G00 G54 X3.1 Z0.1 (Rapid to 1st position) ;
```

```
M08 (Coolant on) ;
G96 S200 (CSS on) ;
(BEGIN CUTTING BLOCKS) ;
G94 G41 X1.0 Z-0.5 K-0.577 F.03 (Begin G94 w/ TNC) ;
Z-0.6 (Optional additional pass) ;
Z-0.7 (Optional additional pass) ;
(BEGIN COMPLETION BLOCKS) ;
G00 G40 X3.1 Z0.1 M09 (TNC off, coolant off) ;
G97 S500 (CSS off) ;
G53 X0 (X home) ;
G53 Z0 M05 (Z home, spindle off) ;
M30 (End program) ;
```

5.7.9 Imaginary Tool Tip and Direction

It is not easy to determine the center of a tool radius on a lathe. The cutting edges are set when a tool is touched off to record tool geometry. The control calculates where the center of the tool radius is by using the edge information, the tool radius, and the direction the cutter is expected to cut in. The X- and Z-axis geometry offsets intersect at a point, called the Imaginary Tool Tip, that aids in determining the tool tip direction. The Tool Tip Direction is determined by a vector originating from the center of the tool radius and extending to the imaginary tool tip, see the following figures.

The tool tip direction of each tool is coded as a single integer from 0 to 9. The tip direction code is found next to the radius offset on the geometry offsets page. It is recommended that a tip direction be specified for all tools using tool nose compensation. The following figure is a summary of the tip coding scheme along with cutter orientation examples.

NOTE: *The tip indicates to the setup person how the programmer intends to measure the tool offset geometry. For example, if the setup sheet shows tip direction 8, the programmer intends the tool geometry to be at the edge of and on the centerline of the tool insert.*

F5.20: Tip Codes and Center Location

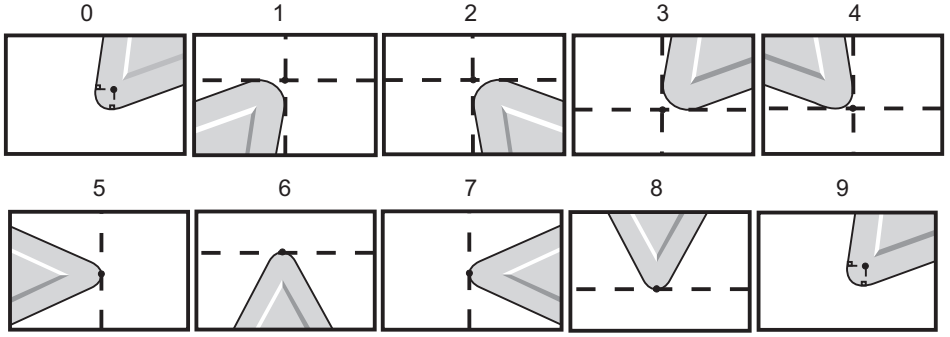

Tip Code	Tool Center Location
0	No specified direction. 0 is not usually used when Tool Nose Compensation is desired.
1	Direction X+, Z+: Off tool
2	Direction X+, Z-: Off tool
3	Direction X-, Z-: Off tool
4	Direction X-, Z+: Off tool
5	Direction Z+: Tool edge
6	Direction X+: Tool edge
7	Direction Z-: Tool edge
8	Direction X-: Tool edge
9	Same as Tip 0

5.7.10 Programming Without Tool Nose Compensation

Without TNC you can manually calculate the compensation and use various tool nose geometries described in the following sections.

5.7.11 Manually Calculating Compensation

When programming a straight line in either X or Z axes the tool tip touches the part at the same point where you touched your original tool offsets in X- and Z-axes. However, when you program a chamfer or an angle, the tip does not touch the part at those same points. Where the tip actually touches the part is dependent upon the degree of angle being cut and also the size of the tool insert. Overcutting or undercutting occurs when programming a part without any compensation.

The following pages contain tables and illustrations demonstrating how to calculate the compensation in order to program the part accurately.

Along with each chart are three examples of compensation using both types of inserts and cutting along three different angles. Next to each illustration is a sample program and explanation of how the compensation is calculated.

Refer to the illustrations on the following pages.

The tool tip is shown as a circle with X and Z points called out. These points designate where the X diameter and Z face offsets are touched off.

Each illustration is a 3" diameter part with lines extending from the part and intersecting at 30°, 45°, and 60° angles.

The point at which the tool tip intersects the lines is where the compensation value is measured.

The compensation value is the distance from the face of the tool tip to the corner of the part. Notice that the tool tip is slightly offset from the actual corner of the part; this is so the tool tip is in the correct position to make the next move and to avoid any overcutting or undercutting.

Use the values found on the charts (angle and radius size) to calculate the correct tool path position for the program.

5.7.12 Tool Nose Compensation Geometry

The following figure shows the various geometries of tool nose compensation. It is organized into four categories of intersection. The intersections can be:

1. linear to linear
2. linear to circular
3. circular to linear
4. circular to circular

Beyond these categories the intersections are classified into angle of intersection and approach, mode to mode, or departure motions.

Two FANUC compensation types are supported, Type A and Type B. The default compensation is Type A.

F5.21: TNC Linear-to-Linear (Type A): [1] Approach, [2], Mode to mode, [3] Departure.

<90

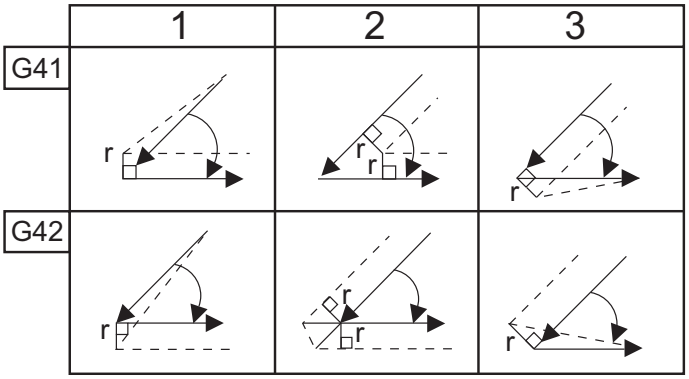

>=90, <180

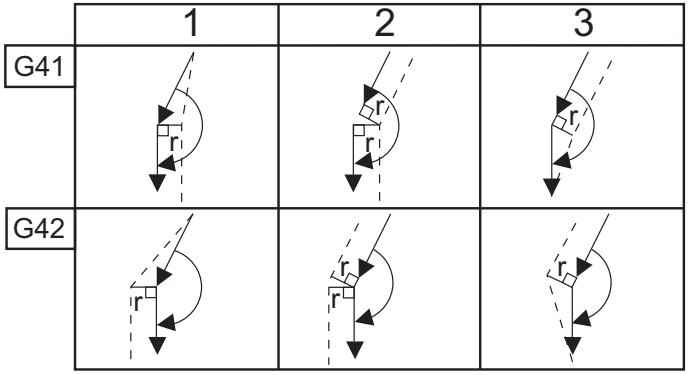

>180

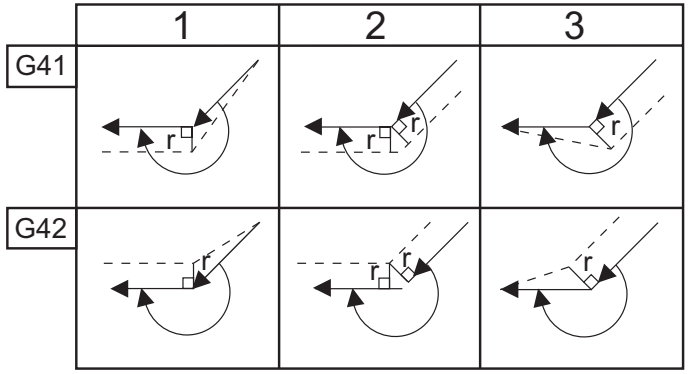

F5.22: TNC Linear-to-Circular (Type A): [1] Approach, [2], Mode to mode, [3] Departure.

<90

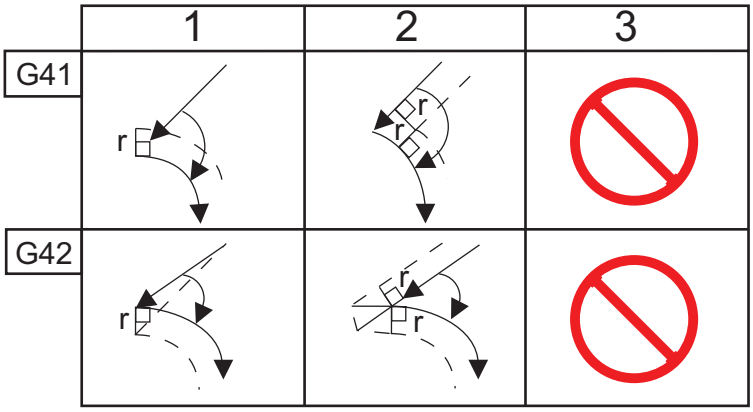

>=90, <180

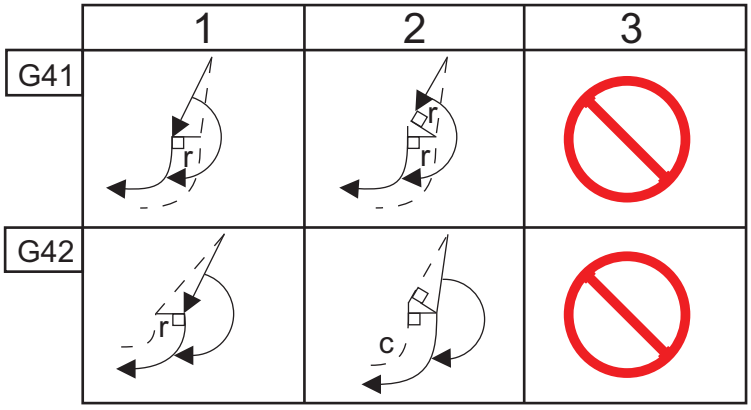

>180

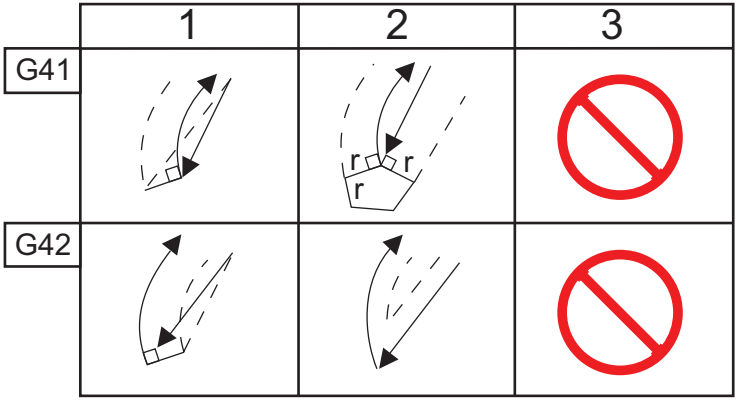

F5.23: TNC Circular-to-Linear (Type A): [1] Approach, [2], Mode to mode, [3] Departure.

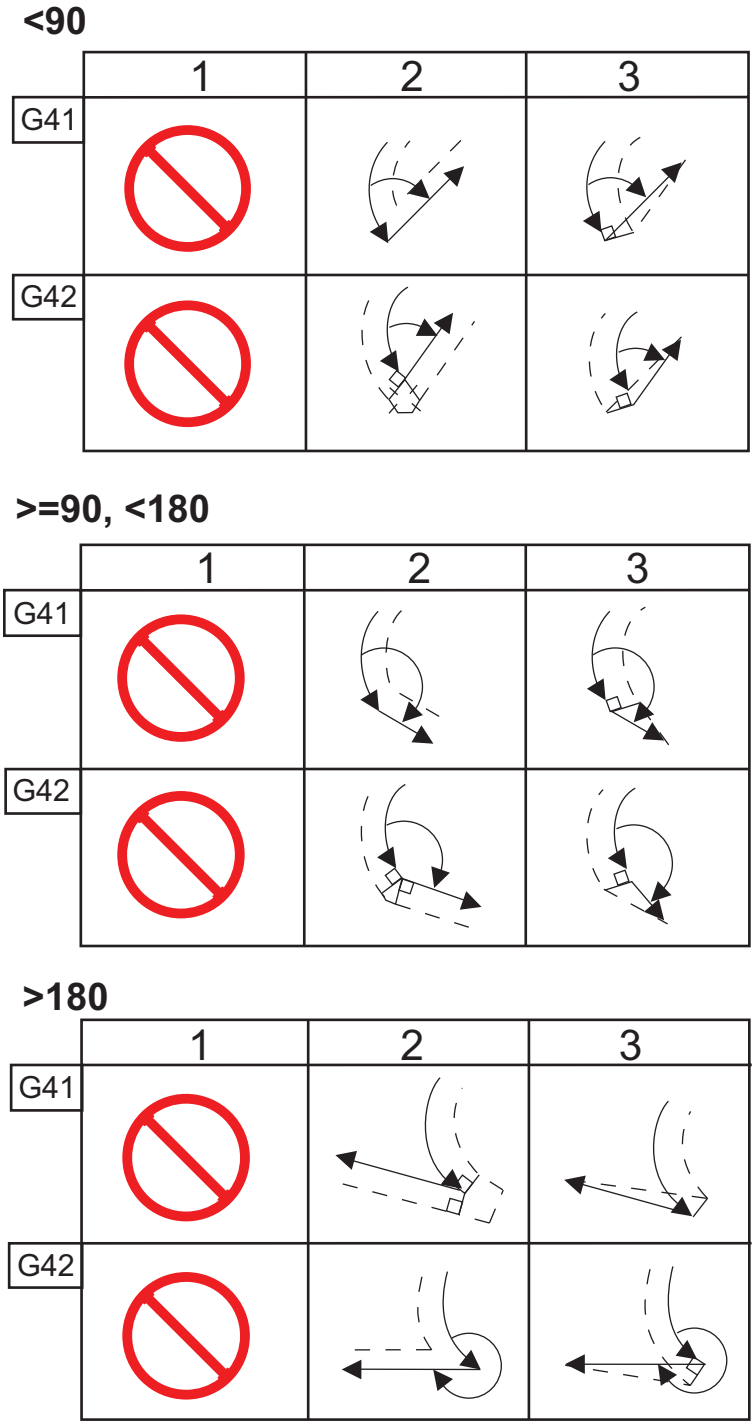

Tool Radius And Angle Chart (1/32 RADIUS)

The X measurement calculated is based on part diameter.

ANGLE	Xc CROSS	Zc LONGITUDINAL	ANGLE	Xc CROSS	Zc LONGITUDINAL
1.	.0010	.0310	46.	.0372	.0180
2.	.0022	.0307	47.	.0378	.0177
3.	.0032	.0304	48.	.0386	.0173
4.	.0042	.0302	49.	.0392	.0170
5.	.0052	.0299	50.	.0398	.0167
6.	.0062	.0296	51.	.0404	.0163
7.	.0072	.0293	52.	.0410	.0160
8.	.0082	.0291	53.	.0416	.0157
9.	.0092	.0288	54.	.0422	.0153
10.	.01	.0285	55.	.0428	.0150
11.	.0110	.0282	56.	.0434	.0146
12.	.0118	.0280	57.	.0440	.0143
13.	.0128	.0277	58.	.0446	.0139
14.	.0136	.0274	59.	.0452	.0136
15.	.0146	.0271	60.	.0458	.0132
16.	.0154	.0269	61.	.0464	.0128
17.	.0162	.0266	62.	.047	.0125
18.	.017	.0263	63.	.0474	.0121
19.	.018	.0260	64.	.0480	.0117
20.	.0188	.0257	65.	.0486	.0113

ANGLE	Xc CROSS	Zc LONGITUDINAL	ANGLE	Xc CROSS	Zc LONGITUDINAL
21.	.0196	.0255	66.	.0492	.0110
22.	.0204	.0252	67.	.0498	.0106
23.	.0212	.0249	68.	.0504	.0102
24.	.022	.0246	69.	.051	.0098
25.	.0226	.0243	70.	.0514	.0094
26.	.0234	.0240	71.	.052	.0090
27.	.0242	.0237	72.	.0526	.0085
28.	.025	.0235	73.	.0532	.0081
29.	.0256	.0232	74.	.0538	.0077
30.	.0264	.0229	75.	.0542	.0073
31.	.0272	.0226	76.	.0548	.0068
32.	.0278	.0223	77.	.0554	.0064
33.	.0286	.0220	78.	.056	.0059
34.	.0252	.0217	79.	.0564	.0055
35.	.03	.0214	80.	.057	.0050
36.	.0306	.0211	81.	.0576	.0046
37.	.0314	.0208	82.	.0582	.0041
38.	.032	.0205	83.	.0586	.0036
39.	.0326	.0202	84.	.0592	.0031
40.	.0334	.0199	85.	.0598	.0026
41.	.034	.0196	86.	.0604	.0021
42.	.0346	.0193	87.	.0608	.0016

ANGLE	Xc CROSS	Zc LONGITUDINAL	ANGLE	Xc CROSS	Zc LONGITUDINAL
43.	.0354	.0189	88.	.0614	.0011
44.	.036	.0186	89.	.062	.0005
45.	.0366	.0183			

F5.24: TNC Circular-to-Circular (Type A): [1] Approach, [2], Mode to mode, [3] Departure.

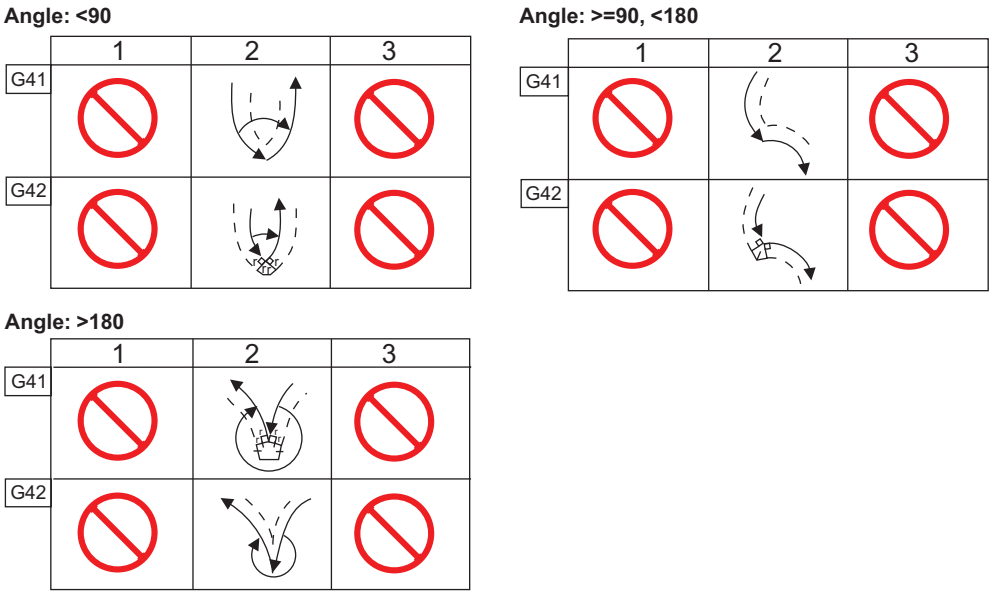

F5.25: Tool Nose Radius Calculation, 1/32, Compensation value for 30 degree angle.

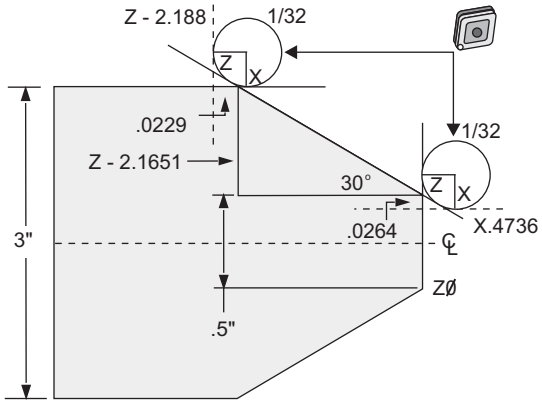

Code	Compensation (1/32 tool nose radius)
G0 X0 Z.1	
G1 Z0	
X.4736	(X.5-0.0264 compensation)
X 3.0 Z-2.188	(Z-2.1651+0.0229 compensation)

F5.26: Tool Nose Radius Calculation, 1/32, Compensation value for 45 degree angle.

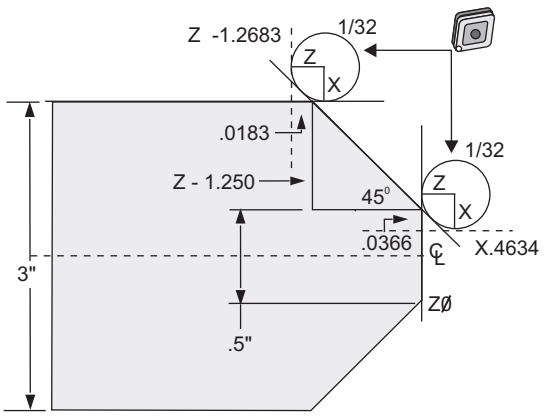

Code	Compensation (1/32 tool nose radius)
G0 X0 Z.1	
G1 Z0	

Code	Compensation (1/32 tool nose radius)
X.4634	(X.5-0.0366 compensation)
X 3.0 Z-1.2683	(Z-1.250+0.0183 compensation)

F5.27: Tool Nose Radius Calculation, 1/64, Compensation value for 30 degree angle.

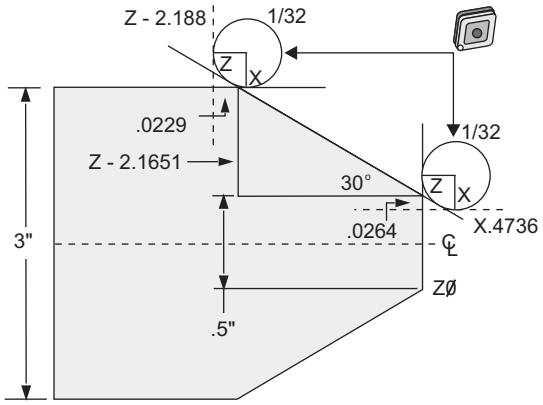

Code	Compensation (1/64 tool nose radius)
G0 X0 Z.1	
G1 Z0	
X.4868	(X.5-0.0132 compensation)
X 3.0 Z-2.1765	(Z-2.1651+0.0114 compensation)

F5.28: Tool Nose Radius Calculation, 1/64, Compensation value for 45 degree angle.

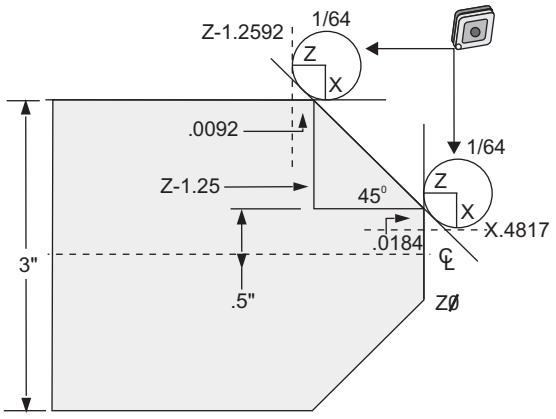

Code	Compensation (1/64 tool nose radius)
G0 X0 Z.1	
G1 Z0	
X.4816	(X.5-0.0184 compensation)
X 3.0 Z-1.2592	(Z-1.25+0.0092 compensation)

F5.29: Tool Nose Radius Calculation, 1/64, Compensation value for 60 degree angle.

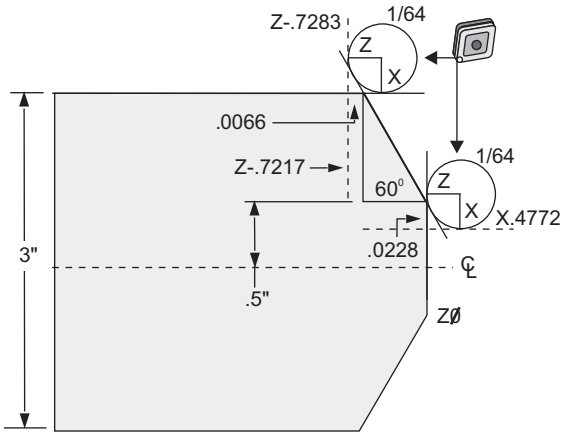

Code	Compensation (1/64 tool nose radius)
G0 X0 Z.1	
G1 Z0	
X.4772	(X.5-0.0132 compensation)
X 3.0 Z-.467	(Z-0.7217+0.0066 compensation)

Tool Radius And Angle Chart (1/64 Radius)

The X measurement calculated is based on part diameter.

ANGLE	Xc CROSS	Zc LONGITUDINAL	ANGLE	Xc CROSS	Zc LONGITUDINAL
1.	.0006	.0155	46.	.00186	.0090
2.	.0001	.0154	47.	.0019	.0088
3.	.0016	.0152	48.	.0192	.0087
4.	.0022	.0151	49.	.0196	.0085
5.	.0026	.0149	50.	.0198	.0083
6.	.0032	.0148	51.	.0202	.0082
7.	.0036	.0147	52.	.0204	.0080
8.	.0040	.0145	53.	.0208	.0078
9.	.0046	.0144	54.	.021	.0077
10.	.0050	.0143	55.	.0214	.0075
11.	.0054	.0141	56.	.0216	.0073
12.	.0060	.0140	57.	.022	.0071
13.	.0064	.0138	58.	.0222	.0070
14.	.0068	.0137	59.	.0226	.0068
15.	.0072	.0136	60.	.0228	.0066
16.	.0078	.0134	61.	.0232	.0064
17.	.0082	.0133	62.	.0234	.0062
18.	.0086	.0132	63.	.0238	.0060
19.	.0090	.0130	64.	.024	.0059
20.	.0094	.0129	65.	.0244	.0057
21.	.0098	.0127	66.	.0246	.0055

ANGLE	Xc CROSS	Zc LONGITUDINAL	ANGLE	Xc CROSS	Zc LONGITUDINAL
22.	.0102	.0126	67.	.0248	.0053
23.	.0106	.0124	68.	.0252	.0051
24.	.011	.0123	69.	.0254	.0049
25.	.0014	.0122	70.	.0258	.0047
26.	.0118	.0120	71.	.0260	.0045
27.	.012	.0119	72.	.0264	.0043
28.	.0124	.0117	73.	.0266	.0041
29.	.0128	.0116	74.	.0268	.0039
30.	.0132	.0114	75.	.0272	.0036
31.	.0136	.0113	76.	.0274	.0034
32.	.014	.0111	77.	.0276	.0032
33.	.0142	.0110	78.	.0280	.0030
34.	.0146	.0108	79.	.0282	.0027
35.	.015	.0107	80.	.0286	.0025
36.	.0154	.0103	81.	.0288	.0023
37.	.0156	.0104	82.	.029	.0020
38.	.016	.0102	83.	.0294	.0018
39.	.0164	.0101	84.	.0296	.0016
40.	.0166	.0099	85.	.0298	.0013
41.	.017	.0098	86.	.0302	.0011
42.	.0174	.0096	87.	.0304	.0008
43.	.0176	.0095	88.	.0308	.0005

ANGLE	Xc CROSS	Zc LONGITUDINAL	ANGLE	Xc CROSS	Zc LONGITUDINAL
44.	.018	.0093	89.	.031	.0003
45.	.0184	.0092			

5.8 Coordinate Systems

CNC controls use a variety of coordinate systems and offsets that allow control of the location of the tooling point to the part. This section describes interaction between various coordinate systems and tooling offsets.

5.8.1 Effective Coordinate System

The effective coordinate system is the sum total of all coordinate systems and offsets in effect. It is the system that is displayed under the label **`Work G54`** on the **`Position`** display. It is also the same as the programmed values in a G code program assuming no Tool Nose Compensation is being performed. Effective Coordinate = global coordinate + common coordinate + work coordinate + child coordinate + tool offsets.

FANUC Work Coordinate Systems - Work coordinates are an additional optional coordinate shift relative to the global coordinate system. There are 105 work coordinate systems available on a Haas control, designated `G54` through `G59` and `G154 P1` through `G154 P99`. `G54` is the work coordinate in effect when the control is powered on. The last used work coordinate stays in effect until another work coordinate is used or the machine is powered off. `G54` can be deselected by ensuring that the X and Z values on the work offset page for `G54` are set to zero.

FANUC Child Coordinate System - A child coordinate is a coordinate system within a work coordinate. Only one child coordinate system is available and it is set through the `G52` command. Any `G52` set during the program is removed once the program finishes at an `M30`, pressing **[RESET]**, or pressing **[POWER OFF]**.

FANUC Common Coordinate System - The common (Comm) coordinate system is found on the second work coordinate offsets display page just below the global coordinate system (`G50`). The common coordinate system is retained in memory when power is turned off. The common coordinate system can be changed manually with `G10` command or by using macro variables.

5.8.2 Automatic Setting of Tool Offsets

Tool offsets are recorded automatically by pressing **[X DIAMETER MEASURE]** or **[Z FACE MEASURE]**. If the common, global, or currently selected work offset have values assigned to them, the recorded tool offset differs from actual machine coordinates by these values. After setting up tools for a job, all tools should be commanded to a safe X, Z coordinate reference point as a tool change location.

5.8.3 Global Coordinate System (G50)

The global coordinate system is a single coordinate system that shifts all work coordinates and tool offsets away from machine zero. The global coordinate system is calculated by the control so the current machine location becomes the effective coordinates specified by a `G50` command. The calculated global coordinate system values can be seen on the **`Active Work Offset`** coordinates display just below auxiliary work offset `G154 P99`. The global coordinate system is cleared to zero automatically when the CNC control is powered on. The global coordinate is not changed when **[RESET]** is pressed.

5.9 Tailstock Setup and Operation

The ST-10 tailstock is manually positioned, then the quill is hydraulically applied to the workpiece. Command hydraulic quill motion using the following M-codes:

`M21`: Tailstock Forward

`M22`: Tailstock Reverse

When an `M21` is commanded, the tailstock quill moves forward and maintains continuous pressure. The tailstock body should be locked in place before commanding an `M21`.

When an `M22` is commanded, the tailstock quill moves away from the workpiece. Hydraulic pressure is applied to retract the quill, then the hydraulic pressure is powered off. The hydraulic system has check valves that hold the position of the quill. Hydraulic pressure is then applied again on Cycle Start and on program looping M99 to ensure the quill remains retracted.

5.10 Subprograms

Subprograms:

- Are usually a series of commands that are repeated several times in a program.
- Are written in a separate program, instead of repeating the commands many times in the main program.
- Are called in the main program with an `M97` or `M98` and a `P` code.
- Can include an `L` for repeat count. The subprogram call repeats `L` times before the main program continues with the next block.

When you use`M97`:

- The P code (nnnnn) is the same as the block number (Nnnnnn) of the local subprogram.
- The subprogram must be within the main program

When you use M98:

- The P code (nnnnn) is the same as the program number (Onnnnn) of the subprogram.
- If the subprogram is not in memory, the file name must be Onnnnn.nc. The file name must contain the O, leading zeros and .nc for the machine to find the subprogram.
- The subprogram must reside in the active directory, or in a location specified in Settings 251/252. Refer to page **446** for more information on subprogram search locations.

5.11 Setting Up Search Locations

When program calls a subprogram, the control first looks for the subprogram in the active directory. If the control cannot find the subprogram, the control uses Settings 251 and 252 to determine where to look next. Refer to those settings for more information.

To build a list of search locations in Setting 252:

1. In the Device Manager (**[LIST PROGRAM]**), select the directory that you want to add to the list.
2. Press **[F3]**.
3. Highlight the **SETTING 252** option in the menu, and then press **[ENTER]**.

   The control adds the current directory to the list of search locations in Setting 252.

To see the list of search locations, look at the values of Setting 252 on the **Settings** page.

5.12 More Information Online

For updated and supplemental information, including tips, tricks, maintenance procedures, and more, visit the Haas Service page at www.HaasCNC.com. You can also scan the code below with your mobile device to go directly to the Haas Service page:

Chapter 6: Options Programming

6.1 Introduction

In addition to the standard functions included with your machine, you may also have optional equipment with special programming considerations. This section tells you how to program these options.

You can contact your HFO to purchase most of these options, if your machine did not come equipped with them.

6.2 Automatic Tool Presetter (ATP)

The Automatic Tool Presetter increases part accuracy and setup consistency, while reducing setup times by up to 50%. The system features easy-to-use automatic and manual modes of operation, with a user-friendly interface for quick, conversational-style programming.

- Automatic, manual, and tool-breakage-detection operations
- Increases tool setting accuracy and consistency
- Conversational-style templates for easy tool-setting operations
- No macro programming required
- Outputs G-code to MDI, where it may be edited, or transferred into a program

6.2.1 Automatic Tool Presetter (ATP) - Alignment

This procedure tells you how to align the automatic tool presetter.

1.

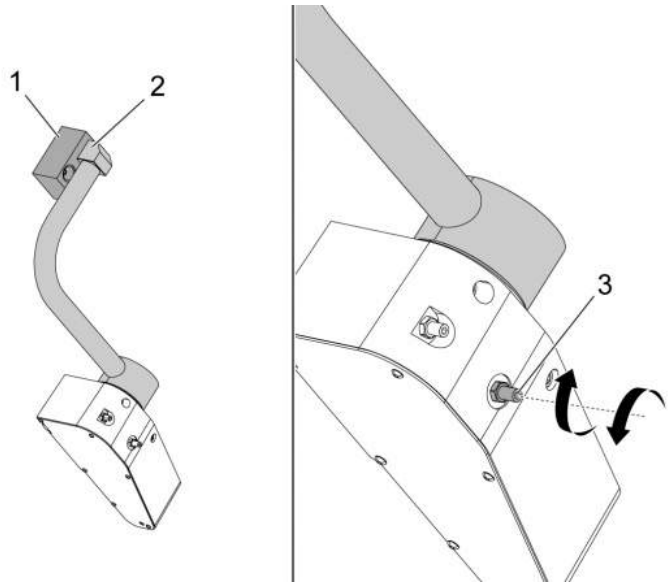

Operate this code in MDI mode for 3 minutes:

```
M104; (Tool Presetter Down)

G04 P4.;

M105; (Tool Presetter Up)

G04 P4.;

M99;
```

If the ATP arm [2] does not align with home block [1], use the 3/8-24" setscrew [3] to move it toward or away from the home block.Make sure to tighten the locknut to the adjusted position.

2.

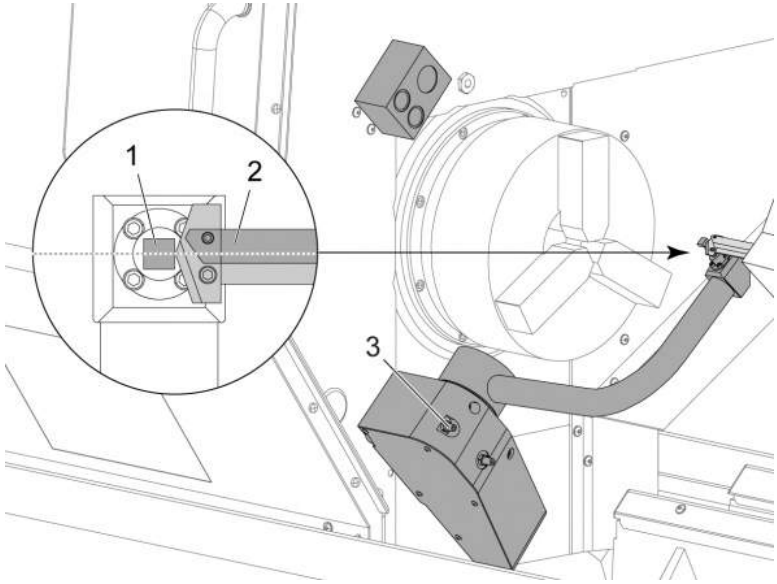

Operate this code in MDI mode: M104. This lowers the ATP arm.

Install a turning-stick tool into the first pocket of the turret.

Jog the X and Z axes so that the tip of a turning-stick tool [2] is near the probe stylus [1].

If the tool does not align with the center of the stylus, turn the top 3/8-24" x 2" setscrew [3] to move the stylus up or down.

Make sure to tighten the locknut to the adjusted position.

3.

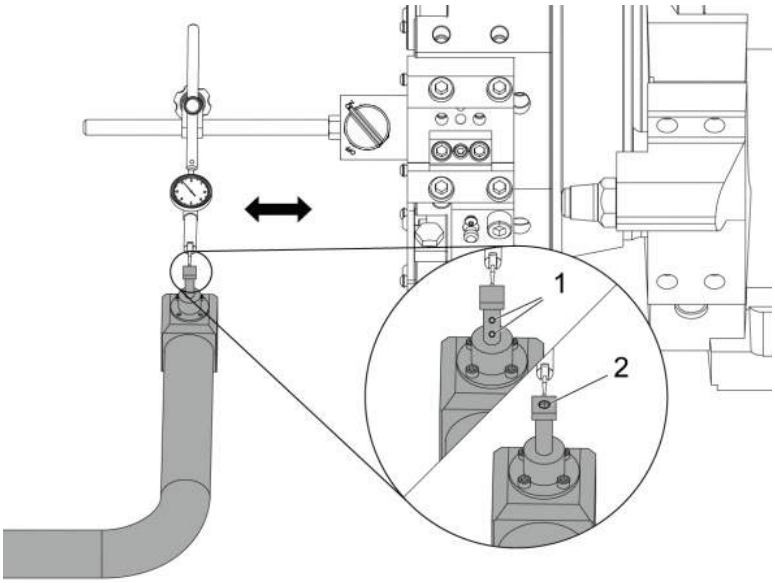

Attach the magnetic base of a dial indicator to the turret.

Move the indicator across the probe stylus.

The probe stylus must be parallel to the Z Axis. The error must be less than 0.0004" (0.01 mm).

If necessary, loosen the probe stylus screws [1] [2] and adjust the position.

NOTE: *There are two types of stylus used with this ATP, one with two adjustment screws [1] and another with a single adjustment screw [2].*

6.2.2 Automatic Tool Presetter (ATP) - Test

This procedure will show you how to test the automatic tool presetter.

1.

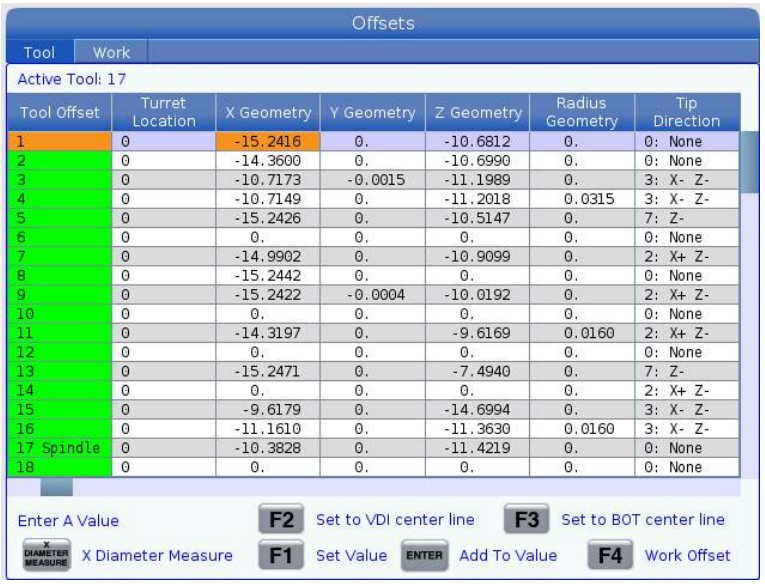

Push **[OFFSET]** until *"TOOL GEOMETRY"* is selected.

Record the value in the OFFSET

CAUTION: *Be sure to accurately record this value.*

2.

Make sure that the ATP arm does not hit parts of the machine.

Push **[CURRENT COMMANDS]**.

Select the Devices tab.

Select the Mechanisms tab.

Highlight Probe Arm.

Push **[F2]** to lift the ATP arm.

Push **[F2]** to lower the ATP arm.

3.

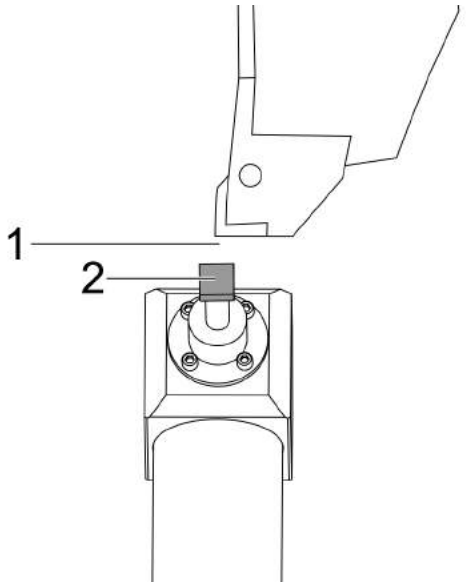

Make sure a turning-stick tool is installed in the first pocket.

Make sure the first pocket faces the spindle.

Jog the X and Z Axes to the center of the probe stylus [2].

Make sure that you have space [1] between the probe stylus [2] and the turning-stick tool.

4.

Push **[OFFSET]** one or two times to go to the TOOL GEOMETRY display.

Select the OFFSET 1 value.

Push 0. Push **[F2]**.

This removes the OFFSET 1 value.

If you get a warning message [1], Push**[Y]** to select YES.

Push**[.001]**.

Push and hold the**[-X]** until the stick tool touches the probe.

NOTE: *You hear a beep sound when the stick tool touches the tool probe.*

Record the value in the OFFSET 1.

Jog the X Axis away from the ATP arm.Do steps 2, 3, and 4 four times.

5.

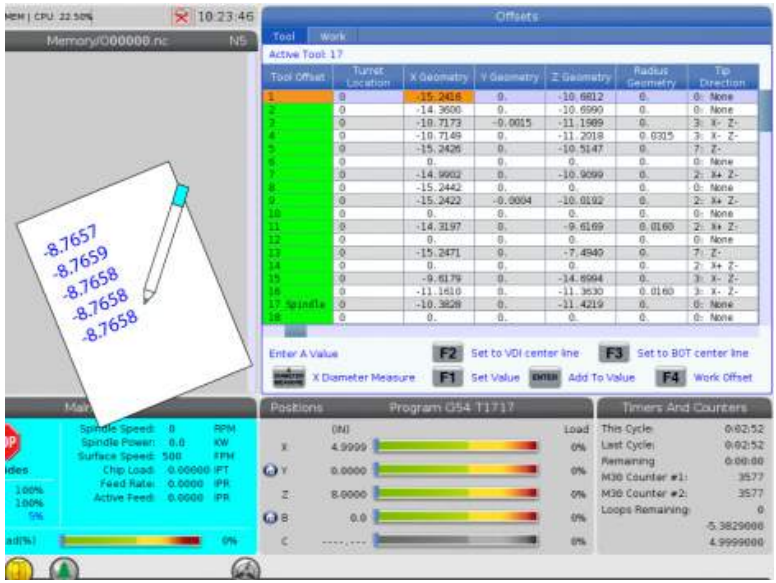

Compare the highest and lowest recorded values.

If the difference is more than 0.002 (0.05 mm), you must measure and adjust the 3/8-24" x 2" setscrew installed into the ATP arm.

The 3/8-24" x 2" setscrew is possible not tightened correctly. If this occurs, do the Automatic Tool Presetter (ATP) - Alignment sub-procedure.

Put the recorded values from step 1 into the OFFSET values for TOOL 1.

Use the M104 and M105 commands in MDI mode to make sure the ATP operates correctly.

```
M104; (Tool Presetter Down)

M105; (Tool Presetter Up)
```

6.2.3 Automatic Tool Presetter (ATP) - Calibration

This procedure will show you how to calibrate the Automatic Tool Presetter.

1.

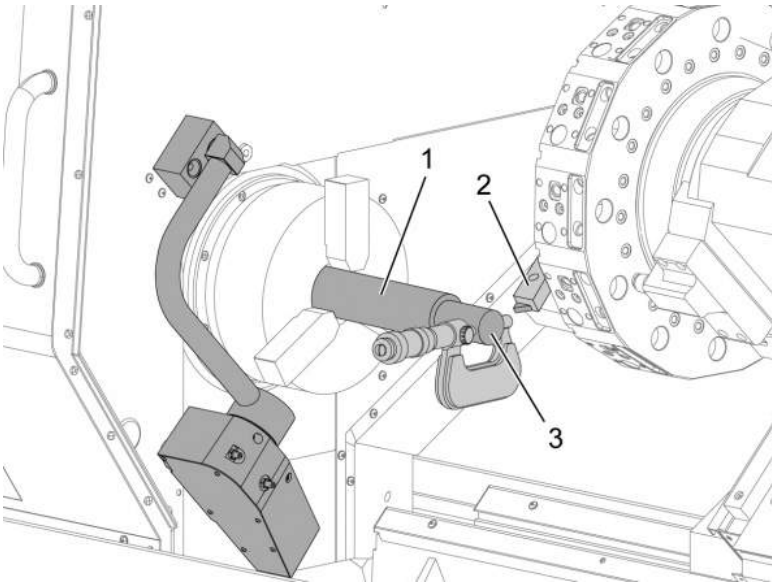

Install an OD turning tool in the turret tool 1 station [2].

Install a workpiece in the chuck [1].

Make a cut along the diameter of the workpiece in the negative Z-axis direction.

Push **[HAND JOG]**. Push**[.001]**. Hold down **[+Z]** to move the tool away from the part.

Stop the spindle.

Measure the diameter of the cut made on the workpiece [3].

Push **[X DIAMETER MEASURE]** to put the value into the **[OFFSET]** column for the X-axis.

Enter the workpiece diameter.

Push **[ENTER]**. This adds the value to the **[OFFSET]** column value.

Record this value as a positive number. This is Offset A. Change Settings 59 through 61, 333, and 334 to 0.

2.

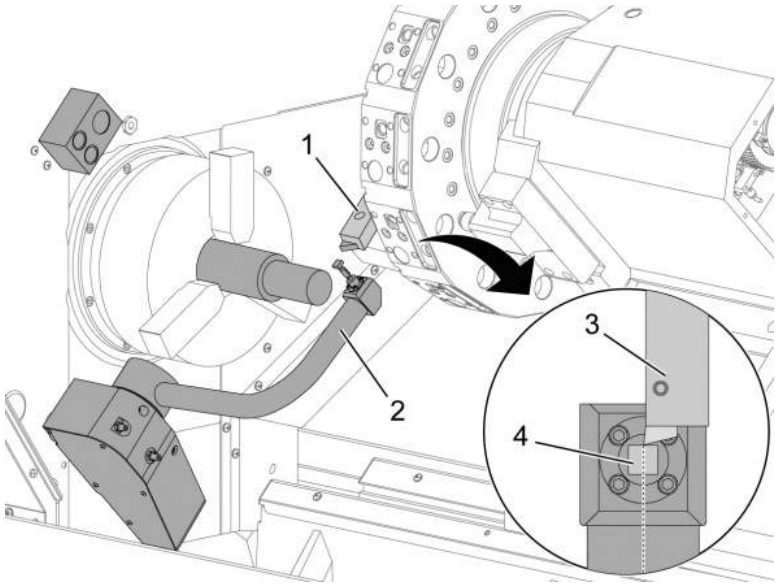

Move the tool away [1] to a safe position out of the ATP arm path [2].

Operate this code in MDI mode: M104.

This moves the ATP arm to the down position.

Jog the Z-axis to align the tool tip [3] with the center of the stylus [4].

Jog the X-axis to move the tool tip to 0.25" (6.4 mm) above the probe stylus.

Push**[.001]**.

Hold down **[-X]** until the probe makes a "beep" sound and stops the tool.

Record the X-axis **[OFFSET]** column value as a positive number.

This is Offset B.Subtract Offset B from Offset A.

Enter the result as a positive value into Setting 59

3.

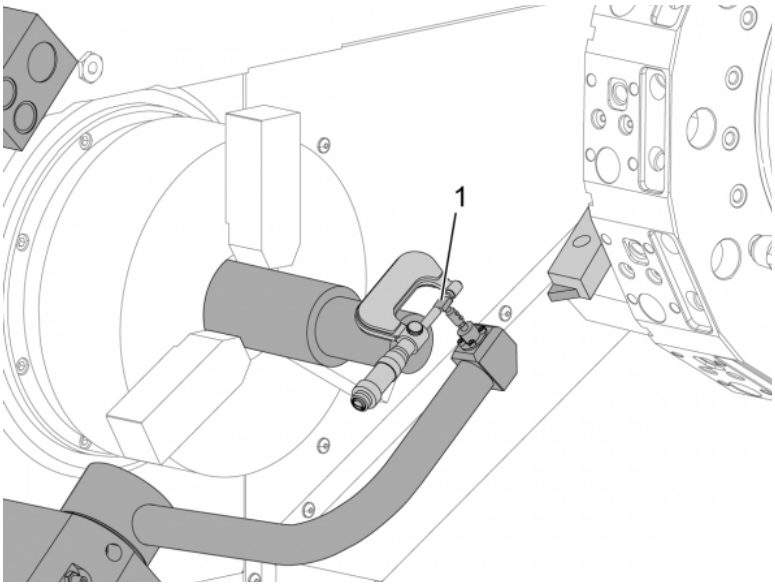

Measure the width of the stylus [1].

Enter this value as a positive number for Settings 63 and 334.

If the probe stylus is calibrated correctly, the values from **[X DIAMETER MEASURE]** and the value from the stylus are equal.

Multiply the probe stylus width by two.

Subtract that value from Setting 59.

Enter this value as a positive number into Setting 60.

Setting 333 will remain zero.

Change the below macro values to match the setting values.

NOTE: *The automatic probing cycles uses these macro variables to verify calibration is complete. If the values do not match the probing cycle, the machine will generate an alarm.*

- Setting 59 = #10582
- Setting 60 = #10583
- Setting 63 = #10585
- Setting 333 = #10584
- Setting 334 = #10585

6.3 C Axis

The C Axis provides high-precision, bi-directional spindle motion that is fully interpolated with X and/or Z motion. You can command spindle speeds from 0.01 to 60 RPM.

C-Axis operation is dependent on the mass, diameter and length of the workpiece and/or the workholding (chuck). Contact the Haas Applications Department if any unusually heavy, large diameter, or long configuration is used.

6.3.1 Cartesian to Polar Transformation (G112)

Cartesian to Polar coordinate programming converts X,Y position commands into rotary C-Axis and linear X-axis moves. Cartesian to Polar coordinate programming greatly reduces the amount of code required to command complex moves. Normally a straight line would require many points to define the path, however, in Cartesian, only end points are necessary. This feature allows face machining programming in the Cartesian coordinate system.

C-Axis Programming Notes

Programmed moves should always position the tool centerline.

Tool paths should never cross the spindle centerline. If necessary re-orient the program so the cut does not go over the center of the part. Cuts that must cross spindle center can be accomplished with two parallel passes on either side of spindle center.

Cartesian to Polar conversion is a modal command. Refer to page **297** for more information on modal G-codes.

The `G112` code is intended to be used with a Lathe using the C-axis and Live Tooling to program cutter anywhere along a non-rotating part.

The `G112` code allows 3-D contouring using the X, Y, and Z axes. The tool centerline programing (`G40`) and cutter diameter compensation (`G41/G42`) are available with `G112`. They are also available for a tool in any of the three plane selection (`G17, G18, G19`).

A Lathe with Y-axis can use G112 and it can be useful to extend the range of travel of the live tool all the way across a part.

Circular motion (G02 and G03) in any of the three planes (G17, G18, G19) are also available with G112.

Since the spindle is not turning in G112, “feed per inch” (G98) must be selected.

Once G112 is active, all motions are programmed with XYZ and C cannot be used.

All X values are in radius when using G112.

Example Program

```
o51120 (CARTESIAN TO POLAR INTERPOLATION) ;
(G54 X0 Y0 is at the center of rotation);
(Z0 is on face of the part) ;
(T1 is an end mill) ;
(BEGIN PREPARATION BLOCKS) ;
T101 (Select tool and offset 1) ;
G00 G20 G40 G80 G97 G99 (Safe startup) ;
G17 (Call XY plane) ;
G98 (Feed per min) ;
P1500 M133 (Live tool CW at 1500 RPM) ;
G00 G54 X2.35 C0. Z0.1 (Rapid to 1st position) ;
G112 (XY to XC interpretation);
M08 (Coolant on) ;
(BEGIN CUTTING BLOCKS) ;
G0 X-.75 Y.5 ;
G01 Z0 F10.;
G01 X0.45 (Point 1) ;
G02 X0.5 Y0.45 R0.05 (Point 2) ;
G01 Y-0.45 (Point 3) ;
G02 X0.45 Y-0.5 R0.05 (Point 4) ;
G01 X-0.45 (Point 5) ;
G02 X-0.5 Y-0.45 R0.05 (Point 6) ;
G01 Y0.45 (Point 7) ;
G02 X-0.45 Y0.5 R0.05 (Point 8) ;
G01 X0.45 Y.6 (Point 9) ;
G00 Z0.1 (Rapid retract);
(BEGIN COMPLETION BLOCKS) ;
G113 (Cancel G112) ;
M135 (Live tool off) ;
G18 (Return to XZ plane) ;
G00 G53 X0 M09 (X home, coolant off) ;
G53 Z0 (Z home) ;
M30 (End program) ;
```

6.3.2 Cartesian Interpolation

Cartesian coordinate commands are interpreted into movements of the linear axis (turret movements) and spindle movements (rotation of the workpiece).

Operation (Settings)

The lathe automatically engages/disengages the C-Axis when the axis is commanded or jogged.

When not using G112, Setting 102 - Diameter is used to calculate the feed rate.

C-Axis incremental moves are possible using the H address code as shown in this example:

```
G0 C90. (C-Axis moves to 90. deg.) ;
H-10. (C-Axis moves to 80. deg. from the previous 90 deg
position) ;
```

Sample Programs

F6.1: Cartesian Interpolation Example 1. (1) Projected Cutting Path (A) The endmill feeds 1" into the workpiece on one side. (B) The C Axis turns 180 degrees to cut the arc shape. (C) The endmill feeds 1" out of the workpiece.

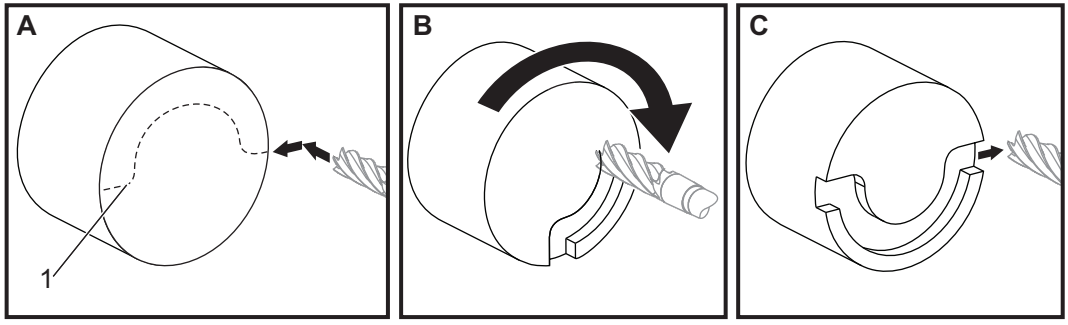


```
o51121 (CARTESIAN INTERPOLATION EX 1) ;
(G54 X0 Y0 is at the center of rotation) ;
(Z0 is on face of the part) ;
(T1 is an end mill) ;
(BEGIN PREPARATION BLOCKS) ;
T101 (Select tool and offset 1) ;
G00 G18 G20 G40 G80 G99 (Safe startup) ;
G98 (Feed per min) ;
G00 G54 X2. C90 Z0.1 (Rapid to 1st position) ;
P1500 M133 (Live tool CW at 1500 RPM) ;
M08 (Coolant on) ;
(BEGIN CUTTING BLOCKS) ;
```

```
G01 Z-0.1 F6.0 (Feed to Z depth) ;
X1.0 (Feed to Position 2) ;
C180. F10.0 (Rotate to cut arc) ;
X2.0 (Feed back to Position 1 ) ;
(BEGIN COMPLETION BLOCKS) ;
G00 Z0.5 M09 (Rapid retract, coolant off) ;
M135 (Live tool off) ;
G18 (Return to XZ plane) ;
G53 X0 Y0 (X & Y home) ;
G53 Z0 (Z home) ;
M30 (End program) ;
```

F6.2: Cartesian Interpolation Example 2

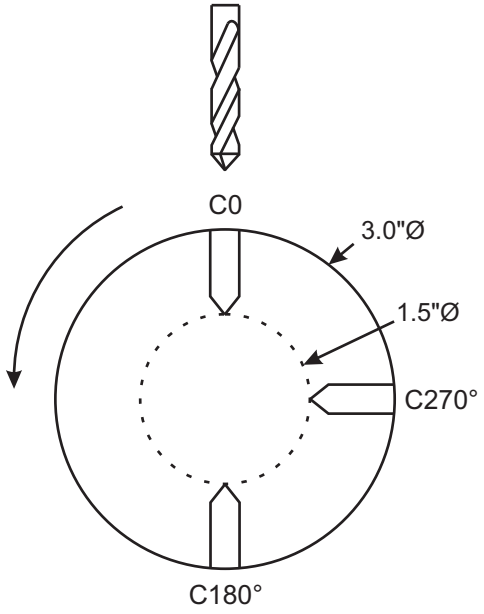


```
o51122 (CARTESIAN INTERPOLATION EX 2);
(G54 X0 Y0 is at the center of rotation) ;
(Z0 is on face of the part) ;
(T1 is a drill) ;
(BEGIN PREPARATION BLOCKS) ;
T101 (Select tool and offset 1) ;
G00 G18 G20 G40 G80 G99 (Safe startup) ;
G19 (Call YZ plane) ;
G98 (Feed per min) ;
G00 G54 X3.25 C0. Y0. Z0.25 ;
(Rapid to 1st position) ;
P1500 M133 (Live tool CW at 1500 RPM) ;
```

```
M08 (Coolant on) ;
G00 Z-0.75 (Rapid to Z depth) ;
(BEGIN CUTTING BLOCKS) ;
G75 X1.5 I0.25 F6. (Begin G75 on 1st hole) ;
G00 C180. (Rotate C axis to new position) ;
G75 X1.5 I0.25 F6. (Begin G75 on 2nd hole) ;
G00 C270. (Rotate C axis to new position) ;
G75 X1.5 I0.25 F6. (Begin G75 on 3rd hole) ;
(BEGIN COMPLETION BLOCKS) ;
G00 Z0.25 M09 (Rapid retract, coolant off) ;
M135 (Live tool off) ;
G18 (Return to XZ plane) ;
G53 X0 (X home) ;
G53 Z0 (Z home) ;
M30 (End program) ;
```

6.4 Dual-Spindle Lathes (DS-Series)

The DS-30 is a lathe with two spindles. The main spindle is in a stationary housing. The other spindle, the “secondary spindle”, has a housing that moves along a linear axis, designated “B”, and replaces the typical tailstock. You use a special set of M-codes to command the secondary spindle.

F6.3: Dual Spindle Lathe with an Optional Y Axis

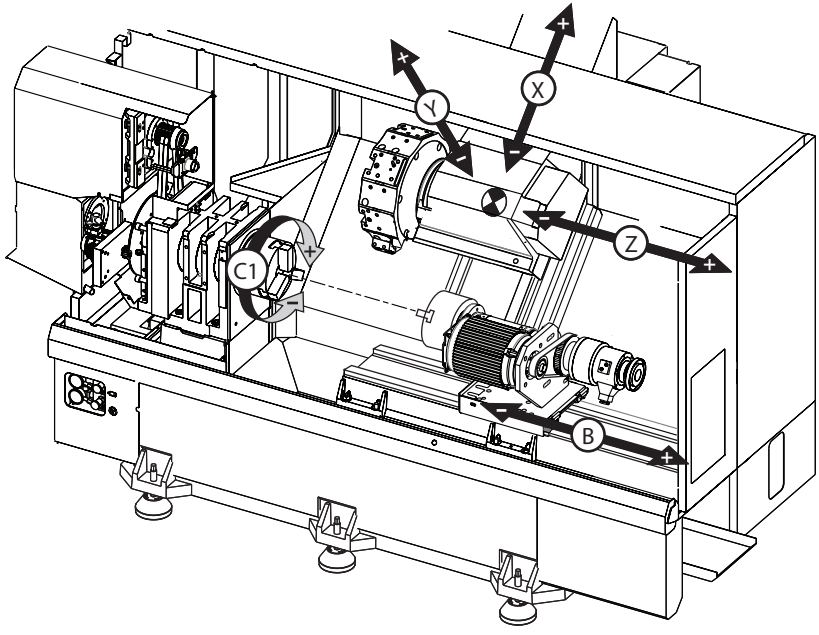

6.4.1 Synchronized Spindle Control

Dual-spindle lathes can synchronize the main and secondary spindle. This means that when the main spindle receives a command to turn, the secondary spindle turns at the same speed, in the same direction. This is called Synchronous Spindle Control (SSC) mode. In SSC mode, both spindles accelerate, maintain speed, and decelerate together. You can then use both spindles to support a workpiece at both ends for maximum support and minimum vibration. You can also transfer the workpiece between the main and secondary spindle, effectively doing a “part flip” while the spindles continue to turn.

There are two G-codes associated with SSC:

`G199` activates SSC.

`G198` cancels SSC.

When you command `G199`, both spindles orient before they accelerate to the programmed speed.

NOTE: *When you program synchronized dual spindles, you should first bring both spindles up to speed with `M03` (for the main spindle) and `M144` (for the secondary spindle) before you command `G199`. If you command `G199` before commanding spindle speed, the two spindles attempt to stay synchronized while they accelerate, causing acceleration to take much longer than normal.*

If SSC mode is in effect, and you press **[RESET]** or **[EMERGENCY STOP]**, SSC mode remains in effect until the spindles stop.

The Synchronized Spindle Control Display

The spindle synchronization control display is available in the **CURRENT COMMANDS** display.

The **SPINDLE** column gives the main spindle status. The **SECONDARY SPINDLE** column gives the secondary spindle status. The third column shows miscellaneous status. On the left is a column of row titles:

`G15`/`G14` - If `G15` appears in the **SECONDARY SPINDLE** column, the main spindle is the leading spindle. If `G14` appears in the **SECONDARY SPINDLE** column, the secondary spindle is the leading spindle.

SYNC (G199) - When `G199` appears in the row, spindle synchronization is active.

POSITION (DEG) - This row shows the current position, in degrees, of both the spindle and the secondary spindle. Values range from -180.0 degrees to 180.0 degrees. This is relative to the default orientation position of each spindle.

The third column indicates the current difference, in degrees, between the two spindles. When both spindles are at their respective zero marks, then this value is zero.

If the third column value is negative, it represents how much the secondary spindle currently lags the main spindle, in degrees.

If the third column value is positive, it represents how much the secondary spindle currently leads the main spindle, in degrees.

VELOCITY (RPM) - This row shows the actual RPM of the main spindle and the secondary spindle.

G199 R PHASE OFS. - This is the programmed `R` value for `G199`. This row is blank when `G199` is not commanded; otherwise it contains the `R` value in the most recently executed `G199` block.

Refer to page **374** for more information on G199.

CHUCK - This column shows the clamped or unclamped status of the work holding (chuck or collet). This row is empty when clamped, or shows “UNCLAMPED” in red when the work holding is open.

LOAD % - This shows the current load percent for each spindle.

R Phase Offset Explained

When dual lathe spindles are synchronized, they orient, then rotate at the same speed with their home positions stationary relative to each other. In other words, the relative orientation you see when both spindles are stopped at their home positions is preserved as synchronized spindles rotate.

You can use an R value with **G199**, **M19**, or **M119** to alter this relative orientation. The R value specifies an offset, in degrees, from the following spindle’s home position. You can use this value to allow the chuck jaws to mesh during a workpiece hand-off operation. Refer to Figure **F6.4** for an example.

F6.4: G199 R Value Example: [1] Leading Spindle, [2] Following Spindle

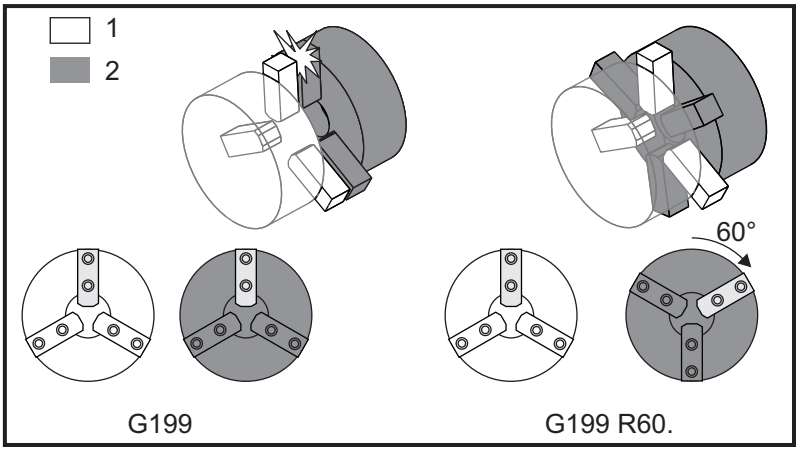

Finding a G199 R Value

To find an appropriate `G199 R` value:

1. In **MDI** mode, command an `M19` to orient the main spindle and an `M119` to orient the secondary spindle.

   This establishes the default orientation between the spindles' home positions.
2. Add an `R` value in degrees to the `M119` to offset the secondary spindle's position.
3. Check the interaction between the chuck jaws. Change the M119 R value to adjust the secondary spindle position until the chuck jaws interact correctly.
4. Record the correct `R` value and use it in the `G199` blocks in your program.

6.4.2 Secondary Spindle Programming

The program structure for the secondary spindle is the same as that for the main spindle. Use `G14` to apply main spindle M-codes and canned cycles to the secondary spindle. Cancel `G14` with `G15`. Refer to page **315** for more information on these G-codes.

Secondary Spindle Commands

Three M-Codes are used to start and stop the secondary spindle:

- `M143` starts the spindle forward.
- `M144` starts the spindle in reverse.
- `M145` stops the spindle.

The `P` address code specifies the spindle speed, from 1 RPM to maximum speed.

Setting 345

Setting 345 selects between OD and ID clamping for the secondary spindle. Refer to page **457** for more information.

G14/G15 - Spindle Swap

These G-codes select which spindle leads during Synchronized Spindle Control (SSC) mode (**G199**).

G14 makes the secondary spindle the leading spindle, and **G15** cancels **G14**.

The **SPINDLE SYNCHRONIZATION CONTROL** screen under current commands tells you which spindle currently leads. If the secondary spindle leads, **G14** displays in the **SECONDARY SPINDLE** column. If the main spindle leads, **G15** displays in the **SPINDLE** column.

6.5 Feature List

The Feature List contains both standard and purchasable options.

F6.5: Features Tab

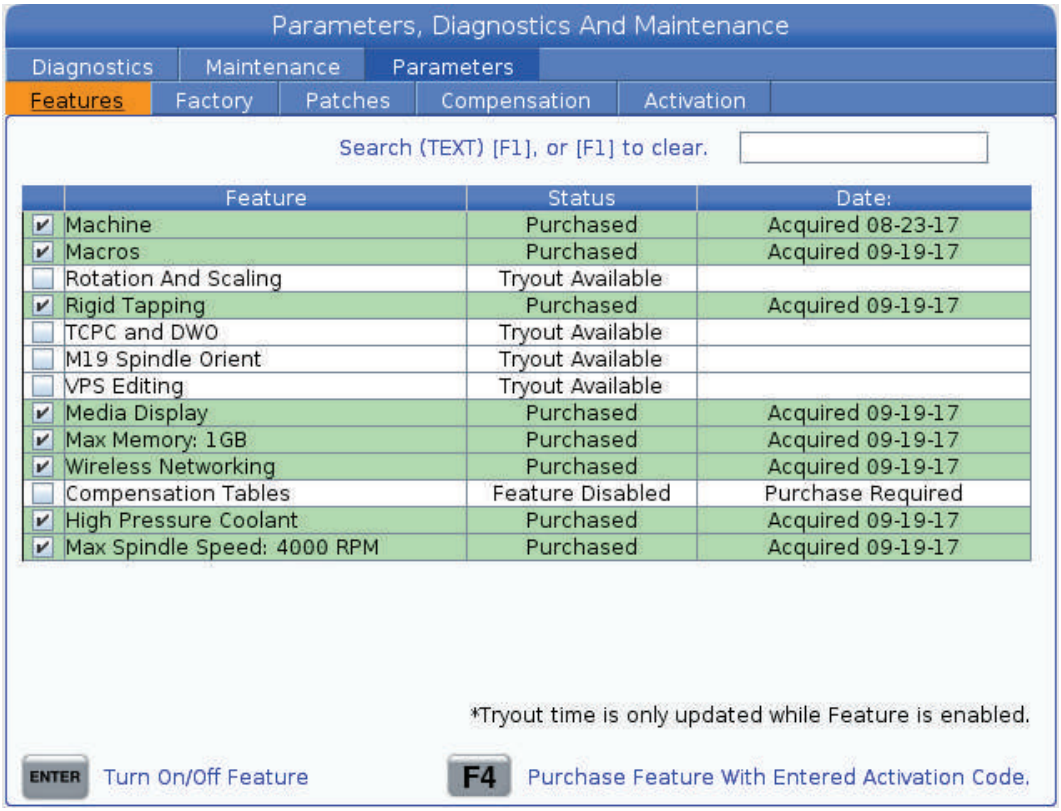

To access the list:

1. Press **[DIAGNOSTIC]**.
2. Navigate to the **Parameters** and then the **Features** tab. (Purchased options are marked in green and their status is set as PURCHASED.)

6.5.1 Purchased Options Enable/Disable

To enable or disable a purchased option:

1. Highlight the option on the **FEATURES** tab.
2. Press **[ENTER]** to turn **ON**/**OFF** the option.

   If the featured option is turned **OFF**, the option is not available.

6.5.2 Option Tryout

Some options have a 200-hour tryout available. The FEATURES tab Status column shows the options available for tryout.

NOTE: *If an option does not have a tryout, the Status column shows* **FEATURE DISABLED***, and you must purchase the option to use it.*

To start tryout:

1. Highlight the feature.
2. Press **[ENTER]**. Press **[ENTER]** again to disable the option and stop the timer.

   The status of the feature changes to **TRYOUT ENABLED**, and the date column shows the remaining hours left in the tryout period. When the tryout period expires, the status changes to **EXPIRED**. You cannot extend the tryout time for expired options. You must purchase them to use them.

NOTE: *Tryout time is only updated while the option is enabled.*

6.6 Live Tooling

This option is not field installable.

F6.6: Axial and Radial Live Tooling: [1] Axial Tool, [2] Radial Tool.

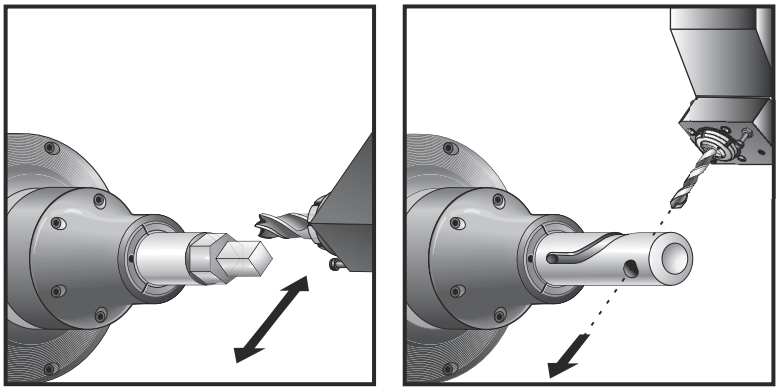

6.6.1 Live Tooling Introduction

The live tooling option allows the user to drive axial or radial tools to perform such operations as milling, drilling, or slotting. Milling shapes is possible using the C-Axis and/or the Y Axis.

Live Tooling Programming Notes

The live tool drive automatically turns itself off when a tool change is commanded.

For the best milling accuracy, use the spindle clamp M Codes (`M14`- Main Spindle / `M114` - Secondary Spindle) before machining. The spindle automatically unclamps when a new main spindle speed is commanded or**[RESET]** is pressed.

Maximum live tooling drive speed is 6000 RPM.

Haas live tooling is designed for medium duty milling, e.g.: 3/4" diameter end mill in mild steel max.

6.6.2 Live Tooling Cutting Tool Installation

CAUTION: *I Never tighten the live tool collets on the turret. Tightening a live tool collet that is on the turret will cause damage to the machine.*

F6.7: ER-32-AN Tube Wrench and Spanner: [1] ER-32-AN Tube wrench, [2] Pin, [3] Spanner 1, [4] Tool holder, [5] ER-32-AN nut insert, [6] Collet housing nut, [7] Spanner 2.

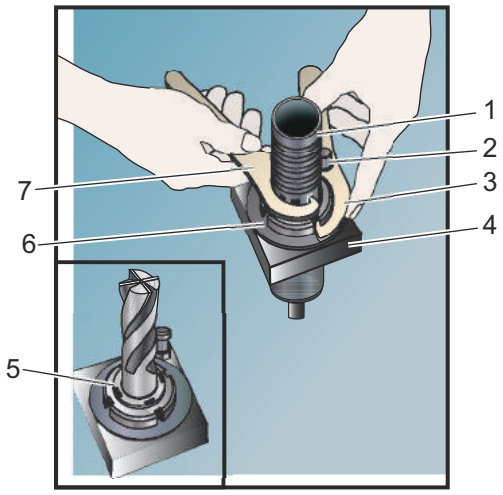

1. Insert the tool bit into the ER-AN nut insert. Thread the nut insert into the collet housing nut.
2. Place the ER-32-AN tube wrench over the tool bit and engage the teeth of the ER-AN nut insert. Tighten the ER-AN nut insert by hand using the tube wrench.
3. Place Spanner 1 [3] over the pin and lock it against the collet housing nut. It may be necessary to turn the collet housing nut to engage the spanner.
4. Engage the teeth of the tube wrench with Spanner 2 [7] and tighten.

6.6.3 Live Tool Mounting in Turret

To mount and install live tools:

1. Mount a radial or axial live tool holder and snug the mounting bolts.
2. Torque the mounting bolts in a criss-cross pattern to 60 ft-lbs (82 N-m). Make sure the bottom face of the toolholder is clamped flush with the face of the turret.

F6.8: Live Tool Installation

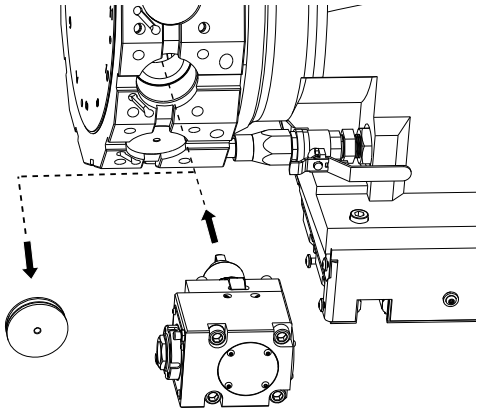

6.6.4 Live Tooling M-codes

The following M-Codes are used in Live Tooling. Also, refer to the M-codes section starting on page **415**.

M19 Orient Spindle (Optional)

`M19` adjusts the spindle to a fixed position. The spindle only orients to the zero position without the optional `M19` orient spindle feature.

The orient spindle function allows `P` and `R` address codes. For example, `M19 P270.` orients the spindle to 270 degrees. The `R` value allows the programmer to specify up to two decimal places; for example, `M19 R123.45`. View the angle in the **`Current Commands Tool Load`** screen.

`M119` positions the secondary spindle (DS lathes) the same way.

NOTE: *The range for `M19` or `M119` is 0 to 360 degrees. If a negative value if given, it will be ignored and spindle will orient to 0 degrees.*

Spindle orientation is dependent on the mass, diameter, and length of the workpiece and/or the workholding (chuck). Contact the Haas Applications Department if any unusually heavy, large diameter, or long configuration is used.

M219 Live Tool Orient (Optional)

P - Number of degrees (0 - 360)
R - Number of degrees with two decimal places (0.00 - 360.00).

`M219` adjusts the live tool to a fixed position. An `M219` orients the spindle to the zero position. The orient spindle function allows P and R address codes. For example:

```
M219 P270. (orients the live tool to 270 degrees) ;
```

The R-value allows the programmer to specify up to two decimal places; for example:

```
M219 R123.45 (orients the live tool to 123.45 degrees) ;
```

M133/M134/M135 Live Tool Fwd/Rev/Stop (Optional)

Refer to page **410** for a complete description of these M-codes.

6.7 Macros (Optional)

6.7.1 Macros Introduction

NOTE: *This control feature is optional; call your HFO for information on how to purchase it.*

Macros add capabilities and flexibility to the control that are not possible with standard G-code. Some possible uses are: families of parts, custom canned cycles, complex motions, and driving optional devices. The possibilities are almost endless.

A Macro is any routine/subprogram that you can run multiple times. A macro statement can assign a value to a variable, read a value from a variable, evaluate an expression, conditionally or unconditionally branch to another point within a program, or conditionally repeat some section of a program.

Here are a few examples of the applications for Macros. The examples are outlines and not complete macro programs.

Useful G and M Codes

M00, M01, M30 - Stop Program

G04 - Dwell

G65 Pxx - Macro subprogram call. Allows passing of variables.

M129 - Set output relay with M-FIN.

M59 - Set output relay.

M69 - Clear output relay.

M96 Pxx Qxx - Conditional Local Branch when Discrete Input Signal is 0

M97 Pxx - Local Sub Routine Call

M98 Pxx - Sub Program Call

M99 - Sub Program Return or Loop

G103 - Block Lookahead Limit. No cutter comp allowed.

M109 - Interactive User Input (refer to page **405**)

Round Off

The control stores decimal numbers as binary values. As a result, numbers stored in variables can be off by 1 least significant digit. For example, the number 7 stored in macro variable #10000, may later be read as 7.000001, 7.000000, or 6.999999. If your statement was

```
IF [#10000 EQ 7]… ;
```

it may give a false reading. A safer way of programming this would be

```
IF [ROUND [#10000] EQ 7]… ;
```

This issue is usually a problem only when you store integers in macro variables where you do not expect to see a fractional part later.

Look-ahead

Look-ahead is a very important concept in macro programming. The control attempts to process as many lines as possible ahead of time in order to speed up processing. This includes the interpretation of macro variables. For example,

```
#12012 = 1 ;
G04 P1. ;
#12012 = 0 ;
```

This is intended to turn an output on, wait 1 second, and then turn it off. However, lookahead causes the output to turn on then immediately back off while the control processes the dwell. G103 P1 is used to limit lookahead to 1 block. To make this example work properly, modify it as follows:

```
G103 P1 (See the G-code section of the manual for a further
```

```
explanation of G103) ;
;
#12012=1 ;
G04 P1. ;
;
;
;
#12012=0 ;
```

Block Look-Ahead and Block Delete

The Haas control uses block look-ahead to read and prepare for blocks of code that come after the current block of code. This lets the control transition smoothly from one motion to the next. G103 limits how far ahead the control looks at blocks of code. The Pnnaddress code in G103 specifies how far ahead the control is allowed to look. For additional information, refer to G103 on page **358**.

Block Delete mode lets you selectively skip blocks of code. Use a / character at the beginning of the program blocks that you want to skip. Press **[BLOCK DELETE]** to enter the Block Delete mode. While Block Delete mode is active, the control does not execute the blocks marked with a / character. For example:

Using a

```
/M99 (Sub-Program Return) ;
```

before a block with

```
M30 (Program End and Rewind) ;
```

makes the sub-program a main program when **[BLOCK DELETE]** is on. The program is used as a sub-program when Block Delete is off.

When a block delete token "/" is used, even if Block Delete mode is not active, the line will block look ahead. This is useful for debugging macro processing within NC programs.

6.7.2 Operation Notes

You save or load macro variables through the Net Share or USB port, much like settings, and offsets.

Macro Variable Display Page

The local and global macro variables `#1` - `#33` and `#10000` - `#10999` are displayed and modified through the Current Commands display.

NOTE: *Internal to the machine, 10000 is added to 3-digit macro variables. For example: Macro 100 is displayed as 10100.*

1. Press **[CURRENT COMMANDS]** and use navigation keys to get to the **`Macro Vars`** page.

   As the control interprets a program, the variable changes and results are displayed on the**`Macro Vars`** display page.

2. Enter a value (maximum is 999999.000000) and then press **[ENTER]** to set the macro variable. Press **[ORIGIN]** to clear macro variables, this displays the Origin clear entry popup. Press number 1 - 3 to make a selection or press **[CANCEL]** to exit.

F6.9: Origin Clear Entry Popup. **`1: Clear Cell`** - Clears the highlighted cell to zero. **`2: Clear Column`** - Clears the active cursor column entries to zero. **`3: Clear All Global Macros`** - Clears Global Macro entries (Macro 1-33, 10000-10999) to zero.

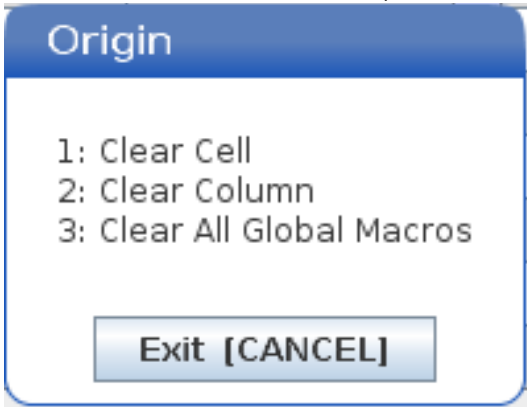

3. To search for a variable, enter the macro variable number and press the up or down arrow.

4. The variables displayed represent values of the variables when the program runs. At times, this may be up to 15 blocks ahead of actual machine actions. Debugging programs is easier when a G103 P1 is inserted at the beginning of a program to limit block buffering. A G103 without the P value can be added after the macro variable blocks in the program. For a macro program to operate correctly it is recommended that the `G103 P1` be left in the program during loading of variables. For more details about G103 see the G-code section of the manual.

Display Macro Variables in the Timers And Counters Window

In the **Timers And Counters** window, you can display the values of any two macro variables and assign them a display name.

To set which two macro variables display in the **Timers And Counters** window:

1. Press **[CURRENT COMMANDS]**.
2. Use the navigation keys to select the **TIMERS** page.
3. Highlight the **Macro Label #1** name or **Macro Label #2** name.
4. Key in a new name, and press **[ENTER]**.
5. Use arrow keys to pick the **Macro Assign #1** or **Macro Assign #2** entry field (corresponding to your chosen **Macro Label** name).
6. Key in the macro variable number (without #) and press **[ENTER]**.

On the **Timers And Counters** window, the field to the right of the entered **Macro Label** (#1 or #2) name displays the assigned variable value.

Macro Arguments

The arguments in a G65 statement are a means to send values to a macro subprogram and set the local variables of a macro subprogram.

The next (2) tables indicate the mapping of the alphabetic address variables to the numeric variables used in a macro subprogram.

Alphabetic Addressing

T6.1: Alphabetic Address Table

Address	Variable	Address	Variable
A	1	N	-
B	2	O	-
C	3	P	-
D	7	Q	17
E	8	R	18
F	9	S	19

Address	Variable	Address	Variable
G	-	T	20
H	11	U	21
I	4	V	22
J	5	W	23
K	6	X	24
L	-	Y	25
M	13	Z	26

Alternate Alphabetic Addressing

Address	Variable	Address	Variable	Address	Variable
A	1	K	12	J	23
B	2	I	13	K	24
C	3	J	14	I	25
I	4	K	15	J	26
J	5	I	16	K	27
K	6	J	17	I	28
I	7	K	18	J	29
J	8	I	19	K	30
K	9	J	20	I	31
I	10	K	21	J	32
J	11	I	22	K	33

Arguments accept any floating-point value to four decimal places. If the control is in metric, it will assume thousandths (.000). In example below, local variable #1 will receive .0001. If a decimal is not included in an argument value, such as:

```
G65 P9910 A1 B2 C3 ;
```

The values are passed to macro subprograms according to this table:

Integer Argument Passing (no decimal point)

Address	Variable		Address	Variable		Address	Variable
A	.0001		J	.0001		S	1.
B	.0002		K	.0001		T	1.
C	.0003		L	1.		U	.0001
D	1.		M	1.		V	.0001
E	1.		N	-		W	.0001
F	1.		O	-		X	.0001
G	-		P	-		Y	.0001
H	1.		Q	.0001		Z	.0001
I	.0001		R	.0001			

All 33 local macro variables can be assigned values with arguments by using the alternate addressing method. The following example shows how to send two sets of coordinate locations to a macro subprogram. Local variables `#4` through `#9` would be set to .0001 through .0006 respectively.

Example:

```
G65 P2000 I1 J2 K3 I4 J5 K6;
```

The following letters cannot be used to pass parameters to a macro subprogram: G, L, N, O or P.

Macro Variables

There are (3) categories of macro variables: local, global, and system.

Macro constants are floating-point values placed in a macro expression. They can be combined with addresses A-Z, or they can stand alone when used within an expression. Examples of constants are 0.0001, 5.3 or -10.

Local Variables

Local variables range between #1 and #33. A set of local variables is available at all times. When a call to a subprogram with a G65 command is executed, local variables are saved and a new set is available for use. This is called nesting of local variables. During a G65 call, all new local variables are cleared to undefined values and any local variables that have corresponding address variables in the G65 line are set to G65 line values. Below is a table of the local variables along with the address variable arguments that change them:

Variable:	1	2	3	4	5	6	7	8	9	10	11
Address:	A	B	C	I	J	K	D	E	F		H
Alternate:							I	J	K	I	J
Variable:	12	13	14	15	16	17	18	19	20	21	22
Address:		M				Q	R	S	T	U	V
Alternate:	K	I	J	K	I	J	K	I	J	K	I
Variable:	23	24	25	26	27	28	29	30	31	32	33
Address:	W	X	Y	Z							
Alternate:	J	K	I	J	K	I	J	K	I	J	K

Variables 10, 12, 14- 16 and 27- 33 do not have corresponding address arguments. They can be set if a sufficient number of I, J and K arguments are used as indicated above in the section about arguments. Once in the macro subprogram, local variables can be read and modified by referencing variable numbers 1- 33.

When the L argument is used to do multiple repetitions of a macro subprogram, the arguments are set only on the first repetition. This means that if local variables 1- 33 are modified in the first repetition, then the next repetition will have access only to the modified values. Local values are retained from repetition to repetition when the L address is greater than 1.

Calling a subprogram via an M97 or M98 does not nest the local variables. Any local variables referenced in a subprogram called by an M98 are the same variables and values that existed prior to the M97 or M98 call.

Global Variables

Global variables are accessible at all times and remain in memory when power is turned off. There is only one copy of each global variable. Global variables are numbered #10000-#10999. Three legacy ranges: (#100-#199, #500-#699, and #800-#999) are included. The legacy 3 digit macro variables begin at the #10000 range; ie., macro variable #100 is displayed as #10100.

NOTE: *Using variable #100 or #10100 in a program the control will access the same data. Using either variable number is acceptable.*

Sometimes, factory-installed options use global variables, for example, probing and pallet changers, etc. Refer to the Macro Variables Table on page **244** for global variables and their use.

CAUTION: *When you use a global variable, make sure that no other programs on the machine use the same global variable.*

System Variables

System variables let you interact with a variety of control conditions. System variable values can change the function of the control. When a program reads a system variable, it can modify its behavior based on the value in the variable. Some system variables have a Read Only status; this means that you cannot modify them. Refer to the Macro Variables Table on page **244** for a list of system variables and their use.

Macro Variables Table

The macro variables table of local, global, and system variables and their usage follows. The new generation control variables list includes legacy variables.

NGC Variable	Legacy Variable	Usage
#0	#0	Not a number (read only)
#1- #33	#1- #33	Macro call arguments
#10000- #10199	#100- #199	General-purpose variables saved on power off

NGC Variable	Legacy Variable	Usage
#10200- #10399	N/A	General-purpose variables saved on power off
#10400- #10499	N/A	General-purpose variables saved on power off
#10500- #10549	#500-#549	General-purpose variables saved on power off
#10550- #10580	#550-#580	Probe calibration data (if installed)
#10581- #10699	#581- #699	General-purpose variables saved on power off
#10700- #10799	#700- #749	Hidden variables for internal use only
#10709	#709	Used for the Fixture Clamp Input. Do not use for general purpose.
#10800- #10999	#800- #999	General-purpose variables saved on power off
#11000- #11063	N/A	64 discrete inputs (read only)
#1064- #1068	#1064- #1068	Maximum axis loads for X, Y, Z, A, and B Axes, respectively
#1080- #1087	#1080- #1087	Raw analog to digital inputs (read only)
#1090- #1098	#1090- #1098	Filtered analog to digital inputs (read only)
#1098	#1098	Spindle load with Haas vector drive (read only)
#1264- #1268	#1264- #1268	Maximum axis loads for C, U, V, W, and T-axes respectively
#1601- #1800	#1601- #1800	Number of flutes on tools #1 through 200
#1801- #2000	#1801- #2000	Maximum recorded vibrations of tools 1 through 200
#2001- #2050	#2001- #2050	X Axis tool shift offsets
#2051- #2100	#2051- #2100	Y Axis tool shift offsets
#2101- #2150	#2101- #2150	Z Axis tool shift offsets
#2201- #2250	#2201- #2250	Tool nose radius wear offsets
#2301- #2350	#2301- #2350	Tool tip direction
#2701- #2750	#2701- #2750	X Axis tool wear offsets
#2751- #2800	#2751- #2800	Y Axis tool wear offsets

NGC Variable	Legacy Variable	Usage
#2801- #2850	#2801- #2850	Z Axis tool wear offsets
#2901- #2950	#2901- #2950	Tool nose radius wear offsets
#3000	#3000	Programmable alarm
#3001	#3001	Millisecond timer
#3002	#3002	Hour timer
#3003	#3003	Single block suppression
#3004	#3004	Override **[FEED HOLD]** control
#3006	#3006	Programmable stop with message
#3011	#3011	Year, month, day
#3012	#3012	Hour, minute, second
#3020	#3020	Power on timer (read only)
#3021	#3021	Cycle start timer
#3022	#3022	Feed timer
#3023	#3023	Present part timer (read only)
#3024	#3024	Last complete part timer
#3025	#3025	Previous part timer (read only)
#3026	#3026	Tool in spindle (read only)
#3027	#3027	Spindle RPM (read only)
#3030	#3030	Single block
#3032	#3032	Block delete
#3033	#3033	Opt stop
#3196	#3196	Cell safe timer
#3201- #3400	#3201- #3400	Actual diameter for tools 1 through 200

NGC Variable	Legacy Variable	Usage
#3401- #3600	#3401- #3600	Programmable coolant positions for tools 1 through 200
#3901	#3901	M30 count 1
#3902	#3902	M30 count 2
#4001- #4021	#4001- #4021	Previous block G-code group codes
#4101- #4126	#4101- #4126	Previous block address codes. ***NOTE:*** *(1) Mapping of 4101 to 4126 is the same as the alphabetic addressing of Macro Arguments section; e.g., the statement X1.3 sets variable #4124 to 1.3.*
#5001- #5006	#5001- #5006	Previous block end position
#5021- #5026	#5021- #5026	Present machine coordinate position
#5041- #5046	#5041- #5046	Present work coordinate position
#5061- #5069	#5061- #5069	Present skip signal position - X, Y, Z, A, B, C, U, V, W
#5081- #5086	#5081- #5086	Present tool offset
#5201- #5206	#5201- #5206	G52 work offsets
#5221- #5226	#5221- #5226	G54 work offsets
#5241- #5246	#5241- #5246	G55 work offsets
#5261- #5266	#5261- #5266	G56 work offsets
#5281- #5286	#5281- #5286	G57 work offsets
#5301- #5306	#5301- #5306	G58 work offsets
#5321- #5326	#5321- #5326	G59 work offsets

NGC Variable	Legacy Variable	Usage
#5401- #5500	#5401- #5500	Tool feed timers (seconds)
#5501- #5600	#5501- #5600	Total tool timers (seconds)
#5601- #5699	#5601- #5699	Tool life monitor limit
#5701- #5800	#5701- #5800	Tool life monitor counter
#5801- #5900	#5801- #5900	Tool load monitor maximum load sensed so far
#5901- #6000	#5901- #6000	Tool load monitor limit
#6001- #6999	#6001- #6999	Reserved. Do not use.
#6198	#6198	NGC/CF flag
#7001- #7006	#7001- #7006	G110 (G154 P1) additional work offsets
#7021- #7026	#7021- #7026	G111 (G154 P2) additional work offsets
#7041- #7386	#7041- #7386	G112 - G129 (G154 P3 - P20) additional work offsets
#8500	#8500	Advanced Tool Management (ATM) group ID
#8501	#8501	ATM percent of available tool life of all tools in the group
#8502	#8502	ATM total available tool usage count in the group
#8503	#8503	ATM total available tool hole count in the group
#8504	#8504	ATM total available tool feed time (in seconds) in the group
#8505	#8505	ATM total available tool total time (in seconds) in the group
#8510	#8510	ATM next tool number to be used
#8511	#8511	ATM percent of available tool life of the next tool
#8512	#8512	ATM available usage count of the next tool
#8513	#8513	ATM available hole count of the next tool
#8514	#8514	ATM available feed time of the next tool (in seconds)
#8515	#8515	ATM available total time of the next tool (in seconds)

NGC Variable	Legacy Variable	Usage
#8550	#8550	Individual tool ID
#8551	#8551	Number of flutes of tools
#8552	#8552	Maximum recorded vibrations
#8553	#8553	Tool length offsets
#8554	#8554	Tool length wear
#8555	#8555	Tool diameter offsets
#8556	#8556	Tool diameter wear
#8557	#8557	Actual diameter
#8558	#8558	Programmable coolant position
#8559	#8559	Tool feed timer (seconds)
#8560	#8560	Total tool timers (seconds)
#8561	#8561	Tool life monitor limit
#8562	#8562	Tool life monitor counter
#8563	#8563	Tool load monitor maximum load sensed so far
#8564	#8564	Tool load monitor limit
#9000	#9000	Thermal comp accumulator
#9000- #9015	#9000- #9015	Reserved (duplicate of axis thermal accumulator)
#9016-#9016	#9016-#9016	Thermal spindle comp accumulator
#9016- #9031	#9016- #9031	Reserved (duplicate of axis thermal accumulator from spindle)
#10000- #10999	N/A	General purpose variables
#11000- #11255	N/A	Discrete inputs (read only)
#12000- #12255	N/A	Discrete outputs
#13000- #13063	N/A	Filtered analog to digital inputs (read only)

NGC Variable	Legacy Variable	Usage
#13013	N/A	Coolant level
#14001-#14006	N/A	G110(G154 P1) additional work offsets
#14021-#14026	N/A	G110(G154 P2) additional work offsets
#14041-#14386	N/A	G110(G154 P3-G154 P20) additional work offsets
#14401-#14406	N/A	G110(G154 P21) additional work offsets
#14421-#15966	N/A	G110(G154 P22-G154 P99) additional work offsets
#20000-#29999	N/A	Setting
#30000-#39999	N/A	Parameter
#32014	N/A	Machine Serial Number
#50001-#50200	N/A	Tool Type
#50201-#50400	N/A	Tool material
#50401-#50600	N/A	Tool Offset Point
#50601-#50800	N/A	Estimated RPM
#50801-#51000	N/A	Estimated Feedrate
#51001-#51200	N/A	Offset Pitch
#51201-#51400	N/A	Actually VPS Estimated RPM
#51401-#51600	N/A	Work material
#51601-#51800	N/A	VPS Feedrate
#51801-#52000	N/A	X Approximate Probe Length
#52001-#52200	N/A	Y Approximate Probe Length
#52201-#52400	N/A	Z Approximate Probe Length
#52401-#52600	N/A	Approximate Probe Diameter
#52601-#52800	N/A	Edge Measure Height

NGC Variable	Legacy Variable	Usage
#52801- #53000	N/A	Tool Tolerance
#53201- #53400	N/A	Probe Type
#53401- #53600	N/A	Live Tool Radius
#53601- #53800	N/A	Live Tool Radius Wear
#53801- #54000	N/A	X Geometry
#54001- #54200	N/A	Y Geometry
#54201- #54400	N/A	Z Geometry
#54401- #54600	N/A	Diameter Geometry
#54601- #54800	N/A	Tip
#54801- #55000	N/A	X Geometry Wear
#55001- #55200	N/A	Y Geometry Wear
#55201- #55400	N/A	Z Geometry Wear
#55401- #55600	N/A	Diameter Wear
#62500 - #62509	N/A	Spindle Speed (spindle 1,2,3)
#62510 - #62519	N/A	Spindle Load (spindle 1,2,3)
#62520 - #62529	N/A	Surface Speed (spindle 1,2,3)
#62530 - #62539	N/A	Chip Load (spindle 1,2,3)
#62540- 62549	N/A	Spindle Override (spindle 1,2,3)
#62590	N/A	Feed Override
#62591	N/A	Rapid Override
#62592	N/A	Feed Rate
#62593	N/A	Active Feed Rate
62742	N/A	Safe Axes Load X

NGC Variable	Legacy Variable	Usage
62743	N/A	Safe Axes Load Y
62744	N/A	Safe Axes Load Z
62745	N/A	Safe Axes Load B
62746	N/A	Active Tool
62747	N/A	Rapid Override
62748	N/A	Slow Rapid Override
62749	N/A	Slow Rapid Distance
62750	N/A	Completed Parts

6.7.3 System Variables In-Depth

System variables are associated with specific functions. A detailed description of these functions follows.

#550-#699 #10550- #10699 General and Probe Calibration Data

These general purpose variables are saved on power off. Some of these higher #5xx variables store probe calibration data. Example: #592 sets which side of the table the tool probe is positioned. If these variables are overwritten, you will need to calibrate the probe again.

NOTE: *If the machine does not have a probe installed, you can use these variables as general-purpose variables saved on power off.*

#1080-#1097 #11000-#11255 #13000-#13063 1-Bit Discrete Inputs

You can connect designated inputs from external devices with these macros:

Variables	Legacy Variables	Usage
#11000-#11255		256 discrete inputs (read only)
#13000-#13063	#1080-#1087 #1090-#1097	Raw and Filtered analog to digital inputs (read only)

Specific input values can be read from within a program. The format is #11nnn where nnn is the Input Number. Press **[DIAGNOSTIC]** and select the `I/O` tab to see the Input and Output numbers for different devices.

Example:

#10000=#11018

This example records the state of #11018, which refers to Input 18 (M-Fin_Input), to variable #10000.

For available User Inputs on the I/O PCB, refer to the Robot Integration Aid reference document in the Haas service website.

#12000-#12255 1-Bit Discrete Outputs

The Haas control is capable of controlling up to 256 discrete outputs. However, a number of these outputs are reserved for the Haas control to use.

Variables	Legacy Variables	Usage
`#12000-#12255`		256 discrete outputs

Specific output values can be read, or written to, from within a program. The format is `#12nnn` where `nnn` is the Output Number.

Example:

```
#10000=#12018 ;
```

This example records the state of `#12018`, which refers to Input 18 (Coolant Pump Motor), to variable #10000.

#1064-#1268 Maximum Axis Loads

These variables contain the maximum load an axis has achieved since the machine was last powered on, or since that Macro Variable was cleared. The Maximum Axis Load is the greatest load (100.0 = 100%) an axis has seen, not the Axis Load at the time that the control reads the variable.

#1064 = X Axis	#1264 = C axis
#1065 = Y Axis	#1265 = U axis
#1066 = Z Axis	#1266 = V axis
#1067 = A Axis	#1267 = W axis
#1068 = B Axis	#1268 = T axis

Tool Offsets

Use these following macro variables to read or set the following geometry, shift, or wear offset values:

#2001-#2050	X-Axis geometry/shift offset
#2051-#2100	Y-Axis geometry/shift offset
#2101-#2150	Z-Axis geometry/shift offset
#2201-#2250	Tool nose radius geometry
#2301-#2350	Tool tip direction
#2701-#2750	X-Axis tool wear
#2751-#2800	Y-Axis tool wear
#2801-#2850	Z-Axis tool wear
#2901-#2950	Tool nose radius wear

#3000 Programmable Alarm Messages

#3000 Alarms can be programmed. A programmable alarm will act like the built-in alarms. An alarm is generated by setting macro variable #3000 to a number between 1 and 999.

```
#3000= 15 (MESSAGE PLACED INTO ALARM LIST) ;
```

When this is done, *Alarm* flashes at the bottom of the display and the text in the next comment is placed into the alarm list. The alarm number (in this example, 15) is added to 1000 and used as an alarm number. If an alarm is generated in this manner all motion stops and the program must be reset to continue. Programmable alarms are always numbered between 1000 and 1999.

#3001-#3002 Timers

Two timers can be set to a value by assigning a number to the respective variable. A program can then read the variable and determine the time passed since the timer was set. Timers can be used to imitate dwell cycles, determine part-to-part time or wherever time-dependent behavior is desired.

- #3001 Millisecond Timer - The millisecond timer represents the system time after power on in number of milliseconds. The whole number returned after accessing #3001 represents the number of milliseconds.
- #3002 Hour Timer - The hour timer is similar to the millisecond timer except that the number returned after accessing#3002 is in hours. The hour and millisecond timers are independent of each other and can be set separately.

#3003 Single Block Suppression

Variable #3003 overrides the Single Block function in G-code. When #3003 has a value of 1, the control executes each G-code command continuously even though the Single Block function is ON. When #3003 has a value of zero, Single Block operates as normal. You must press **[CYCLE START]** to execute each line of code in single block mode.

```
#3003=1 ;
G54 G00 X0 Z0 ;
G81 R0.2 Z-0.1 F.002 L0 ;
S2000 M03 ;
#3003=0 ;
T02 M06 ;
Q.05 G83 R0.2 Z-1. F.001 L0 ;
X0. Z0. ;
...
```

#3004 Enables and Disables Feed Hold

Variable #3004 overrides specific control features during operation.

The first bit disables **[FEED HOLD]**. If variable #3004 is set to 1, **[FEED HOLD]** is disabled for the program blocks that follow. Set #3004 to 0 to enable **[FEED HOLD]** again. For example:

```
...
(Approach code - [FEED HOLD] allowed) ;
#3004=1 (Disables [FEED HOLD]) ;
(Non-stoppable code - [FEED HOLD] not allowed) ;
#3004=0 (Enables [FEED HOLD]) ;
(Depart code - [FEED HOLD] allowed) ;
...
```

This is a map of variable #3004 bits and the associated overrides.

E = Enabled D = Disabled

#3004	Feed Hold	Feed Rate Override	Exact Stop Check
0	E	E	E
1	D	E	E
2	E	D	E
3	D	D	E
4	E	E	D
5	D	E	D
6	E	D	D
7	D	D	D

NOTE: *When the feed rate override variable is set (#3004 = 2), the control will set the feed rate override to 100% (default). During #3004 = 2 the control will show 100% in red bold text on the display until the variable is reset. Once the feed rate override is reset (#3004 = 0) the feed rate will be restored to the previous value before setting the variable.*

#3006 Programmable Stop

You can add stops to the program that act like an M00 - The control stops and waits until you press **[CYCLE START]**, then the program continues with the block after the #3006. In this example, the control displays the comment on the lower-center of the screen.

```
#3006=1 (comment here) ;
```

#3030 Single Block

In Next Generation Control when the system variable #3030 is set to a 1; the control will go into single block mode. There is no need to limit the lookahead using a G103 P1, the Next Generation Control will correctly process this code.

NOTE: *For the Classic Haas Control to process system variable #3030=1 correctly, it is necessary to limit the lookahead to 1 block using a G103 P1 before the #3030=1 code.*

#4001-#4021 Last Block (Modal) Group Codes

G-code groups let the machine control process the codes more efficiently. G-codes with similar functions are usually in the same group. For example, G90 and G91 are under group 3. Macro variables #4001 through #4021 store the last or default G code for any of 21 groups.

G-Codes Group number is listed next to it's description in the G-Code section.

Example:

G81 Drill Canned Cycle (Group 09)

When a macro program reads the group code, the program can change the behavior of the G-code. If #4003 contains 91, then a macro program could determine that all moves should be incremental rather than absolute. There is no associated variable for group zero; group zero G codes are Non-modal.

#4101-#4126 Last Block (Modal) Address Data

Address codes A-Z (excluding G) are maintained as modal values. The information represented by the last line of code interpreted by the lookahead process is contained in variables #4101 through #4126. The numeric mapping of variable numbers to alphabetic addresses corresponds to the mapping under alphabetic addresses. For example, the value of the previously interpreted D address is found in #4107 and the last interpreted I value is #4104. When aliasing a macro to an M-code, you may not pass variables to the macro using variables #1 - #33. Instead, use the values from #4101 - #4126 in the macro.

#5001-#5006 Last Target Position

The final programmed point for the last motion block can be accessed through variables #5001 - #5006, X, Z, Y, A, B, and C respectively. Values are given in the current work coordinate system and can be used while the machine is in motion.

#5021-#5026 Current Machine Coordinate Position

#5021 X-Axis	#5022 Z Axis	#5023 Y-Axis
#5024 A-Axis	#5025 B-Axis	#5026 C-axis

To get the current machine axis positions, call macro variables #5021- #5025 corresponding to axis X, Z, Y, A, and B, respectively.

NOTE: *Values CANNOT be read while the machine is in motion.*

#5041-#5046 Current Work Coordinate Position

To get the current machine axis positions, call macro variables #5041-#5046 corresponding to axis X, Z, Y, A, B, and C, respectively.

NOTE: *The values CANNOT be read while the machine is in motion.*

The value of #504X has tool length compensation applied to it.

#5061-#5069 Current Skip Signal Position

Macro variables #5061-#5069 corresponding to X, Z, Y, A, B, C, U, V and W respectively, give the axis positions where the last skip signal occurred. Values are given in the current work coordinate system and can be used while the machine is in motion.

The value of #5062 (Z) has tool length compensation applied to it.

#5081-#5086 Tool Length Compensation

Macro variables #5081 - #5086 give the current total tool length compensation in axis X, Z, Y, A, B, or C, respectively. This includes tool length offset referenced by the current value set in T plus the wear value.

#5201-#5326, #7001-#7386, #14001-#14386 Work Offsets

Macro expressions can read and set all work offsets. This lets you preset coordinates to exact locations, or set coordinates to values based upon the results of skip signal (probed) locations and calculations. When any of the offsets are read, the interpretation look-ahead queue is stopped until that block is executed.

#5201- #5206	G52 X, Z, Y, A, B, C offset values
#5221- #5226	G54 X, Z, Y, A, B, C offset values
#5241- #5246	G55 X, Z, Y, A, B, C offset values
#5261- #5266	G56 X, Z, Y, A, B, C offset values
#5281- #5286	G57 X, Z, Y, A, B, C offset values
#5301- #5306	G58 X, Z, Y, A, B, C offset values
#5321- #5326	G59 X, Z, Y, A, B, C offset values
#7001- #7006	G110 (G154 P1) additional work offsets
#7021-#7026 (#14021-#14026)	G111 (G154 P2) additional work offsets
#7041-#7046 (#14041-#14046)	G114 (G154 P3) additional work offsets
#7061-#7066 (#14061-#14066)	G115 (G154 P4) additional work offsets
#7081-#7086 (#14081-#14086)	G116 (G154 P5) additional work offsets
#7101-#7106 (#14101-#14106)	G117 (G154 P6) additional work offsets
#7121-#7126 (#14121-#14126)	G118 (G154 P7) additional work offsets
#7141-#7146 (#14141-#14146)	G119 (G154 P8) additional work offsets
#7161-#7166 (#14161-#14166)	G120 (G154 P9) additional work offsets

#7181-#7186 (#14181-#14186)	G121 (G154 P10) additional work offsets
#7201-#7206 (#14201-#14206)	G122 (G154 P11) additional work offsets
#7221-#7226 (#14221-#14221)	G123 (G154 P12) additional work offsets
#7241-#7246 (#14241-#14246)	G124 (G154 P13) additional work offsets
#7261-#7266 (#14261-#14266)	G125 (G154 P14) additional work offsets
#7281-#7286 (#14281-#14286)	G126 (G154 P15) additional work offsets
#7301-#7306 (#14301-#14306)	G127 (G154 P16) additional work offsets
#7321-#7326 (#14321-#14326)	G128 (G154 P17) additional work offsets
#7341-#7346 (#14341-#14346)	G129 (G154 P18) additional work offsets
#7361-#7366 (#14361-#14366)	G154 P19 additional work offsets
#7381-#7386 (#14381-#14386)	G154 P20 additional work offsets

#6001-#6250 Settings Access with Macro Variables

Access settings through variables #20000 - #20999 or #6001 - #6250, starting from setting 1 respectively. Refer to page **415** for the detailed descriptions of the settings that are available in the control.

NOTE: *The #20000 - 20999 range numbers correspond directly to Setting numbers. You should use #6001 - #6250 for settings access only if you need your program to be compatible with older Haas machines.*

#6198 Next-Generation Control Identifier

The macro variable #6198 has a read-only value of 1000000.

You can test #6198 in a program to detect the control version, and then conditionally run program code for that control version. For example:

```
%

IF[#6198 EQ 1000000] GOTO5 ;

(Non-NGC code) ;

GOTO6 ;

N5 (NGC code) ;

N6 M30 ;

%
```

In this program, if the value stored in #6198 is equal to 1000000, go to Next Generation Control compatible code then end the program. If if the value stored in #6198 is not equal to 1000000, run the non-NGC program and then end the program.

#7501 - #7806, #3028 Pallet Changer Variables

The status of the pallets from the Automatic Pallet Changer is checked with these variables:

#7501-#7506	Pallet priority
#7601-#7606	Pallet status
#7701-#7706	Part program numbers assigned to pallets
#7801-#7806	Pallet usage count
#3028	Number of pallet loaded on receiver

#8500-#8515 Advanced Tool Management

These variables give information on Advanced Tool Management (ATM). Set variable #8500 to the tool group number, then access information for the selected tool group with the read-only macros #8501-#8515.

#8500	Advanced Tool Management (ATM). Group ID
#8501	ATM. Percent of available tool life of all tools in the group.
#8502	ATM. Total available tool usage count in the group.
#8503	ATM. Total available tool hole count in the group.
#8504	ATM. Total available tool feed time (in seconds) in the group.
#8505	ATM. Total available tool total time (in seconds) in the group.
#8510	ATM. Next tool number to be used.
#8511	ATM. Percent of available tool life of the next tool.
#8512	ATM. Available usage count of the next tool.
#8513	ATM. Available hole count of the next tool.
#8514	ATM. Available feed time of the next tool (in seconds).
#8515	ATM. Available total time of the next tool (in seconds).

#8550-#8567 Advanced Tool Management Tooling

These variables give information on tooling. Set variable `#8550` to the tool offset number, then access information for the selected tool with the read-only macros `#8551`-`#8567`.

NOTE: *Macro variables `#1601`-`#2800` give access to the same data for individual tools as `#8550`-`#8567` give for Tool Group tools.*

#8550	Individual tool ID
#8551	Number of Flutes on tool
#8552	Maximum recorded vibration
#8553	Tool length offset
#8554	Tool length wear
#8555	Tool diameter offset
#8556	Tool diameter wear
#8557	Actual diameter
#8558	Programmable coolant position
#8559	Tool feed timer (seconds)
#8560	Total tool timers (seconds)
#8561	Tool life monitor limit
#8562	Tool life monitor counter
#8563	Tool load monitor maximum load sensed so far
#8564	Tool load monitor limit

#50001 - #50200 Tool Type

Use macro variables #50001 - #50200, to read or write the tool type set in the tool offset page.

T6.2: Available Tool Types for Lathe

Tool Type	Tool Type #
OD Turn	21
OD Groove	22
OD Thread	23

Tool Type	Tool Type #
Part Off	24
Drill	25
ID Turn	26
ID Groove	27
ID Thread	28
Face Groove	29
Tap	30
Probe	31
Reserve for Future Use	32-40

T6.3: Available Tool Types for Lathe with Live Tool Option

Tool Type	Tool Type#
Spot Drill	41
Drill	42
Tap	43
End Mil	44
Shell Mill	45
Ball Nose	46
Reserve for Future Use	47-60

6.7.4 Variable Usage

All variables are referenced with a number sign (#) followed by a positive number: #1, #10001, and #10501.

Variables are decimal values that are represented as floating point numbers. If a variable has never been used, it can take on a special **undefined** value. This indicates that it has not been used. A variable can be set to **undefined** with the special variable #0. #0 has the value of undefined or 0.0 depending on its context. Indirect references to variables can be accomplished by enclosing the variable number in brackets: #[<Expression>]

The expression is evaluated and the result becomes the variable accessed. For example:

```
#1=3 ;
#[#1]=3.5 + #1 ;
```

This sets the variable #3 to the value 6.5.

A variable can be used in place of a G-code address where address refers to the letters A-Z.

In the block:

```
N1 G0 X1.0 ;
```

the variables can be set to the following values:

```
#7 = 0 ;
#1 = 1.0 ;
```

and replaced by:

```
N1 G#7 X#1 ;
```

Values in the variables at runtime are used as the address values.

6.7.5 Address Substitution

The usual method of setting control addresses A-Z is the address followed by a number. For example:

```
G01 X1.5 Z3.7 F.02 ;
```

sets addresses G, X, Z, and F to 1, 1.5, 3.7, and 0.02 respectively, and thus instructs the control to move linearly, G01, to position X = 1.5 and Z = 3.7 at a feed rate of 0.02 inches per revolution. Macro syntax allows the address value to be replaced with any variable or expression.

The previous statement can be replaced by this code:

```
#1=1 ;
#2=0.5 ;
#3=3.7 ;
#4=0.02 ;
G#1 X[#1+#2] Z#3 F#4 ;
```

The permissible syntax on addresses A-Z (exclude N or O) is as follows:

<address><variable>	A#101
<address><-><variable>	A-#101
<address>[<expression>]	Z[#5041+3.5]
<address><->[<expression>]	Z-[SIN[#1]]

If the value of the variable does not agree with the range of the address, then the usual control alarm results. For example, this code results in an invalid G code alarm because there is no G143 code:

```
#1= 143 ;
G#1 ;
```

When a variable or expression is used in place of an address value, the value is rounded to the least significant digit. If #1=.123456, then G01 X#1 would move the machine tool to .1235 on the X Axis. If the control is in the metric mode, the machine would be moved to .123 on the X axis.

When an undefined variable is used to replace an address value, that address reference is ignored. For example:

```
(#1 is undefined) ;
G00 X1.0 Z#1 ;
```

becomes

```
G00 X1.0 (no Z movement takes place) ;
```

Macro Statements

Macro statements are lines of code that allow the programmer to manipulate the control with features similar to any standard programming language. Included are functions, operators, conditional and arithmetic expressions, assignment statements, and control statements.

Functions and operators are used in expressions to modify variables or values. The operators are essential to expressions while functions make the programmer's job easier.

Functions

Functions are built-in routines that the programmer has available to use. All functions have the form <function_name>[argument] and return floating-point decimal values. The functions provided in the Haas control are as follows:

Function	Argument	Returns	Notes
SIN[ ]	Degrees	Decimal	Sine
COS[ ]	Degrees	Decimal	Cosine
TAN[ ]	Degrees	Decimal	Tangent
ATAN[ ]	Decimal	Degrees	Arctangent Same as FANUC ATAN[ ]/[1]
SQRT[ ]	Decimal	Decimal	Square root
ABS[ ]	Decimal	Decimal	Absolute value
ROUND[ ]	Decimal	Decimal	Round off a decimal
FIX[ ]	Decimal	Integer	Truncate fraction
ACOS[ ]	Decimal	Degrees	Arc cosine
ASIN[ ]	Decimal	Degrees	Arcsine
#[ ]	Integer	Integer	Indirect reference Refer to page **265**

Notes on Functions

The function ROUND works differently depending on the context that it is used. When used in arithmetic expressions, any number with a fractional part greater than or equal to .5 is rounded up to the next whole integer; otherwise, the fractional part is truncated from the number.

```
%
#1=1.714 ;
#2=ROUND[#1] (#2 is set to 2.0) ;
#1=3.1416 ;
#2=ROUND[#1] (#2 is set to 3.0) ;
%
```

When ROUND is used in an address expression, metric and angle dimensions are rounded to three-place precision. For inch dimensions, four-place precision is the default.

```
%
#1= 1.00333 ;
G00 X[ #1 + #1 ] ;
(Table X Axis moves to 2.0067) ;
G00 X[ ROUND[ #1 ] + ROUND[ #1 ] ] ;
(Table X Axis moves to 2.0067) ;
G00 A[ #1 + #1 ] ;
(Axis rotates to 2.007) ;
G00 A[ ROUND[ #1 ] + ROUND[ #1 ] ] ;
(Axis rotates to 2.007) ;
D[1.67] (Diameter rounded up to 2) ;
%
```

Fix vs. Round

```
%
#1=3.54 ;
#2=ROUND[#1] ;
#3=FIX[#1].
%
```

#2 will be set to 4. #3 will be set to 3.

Operators

Operators have (3) categories: Boolean, Arithmetic, and Logical.

Boolean Operators

Boolean operators always evaluate to 1.0 (TRUE) or 0.0 (FALSE). There are six Boolean operators. These operators are not restricted to conditional expressions, but they most often are used in conditional expressions. They are:

EQ - Equal To

NE - Not Equal To

GT - Greater Than

LT - Less Than

GE - Greater Than or Equal To

LE - Less Than or Equal To

Here are four examples of how Boolean and Logical operators can be used:

Example	Explanation
`IF [#10001 EQ 0.0] GOTO100 ;`	Jump to block 100 if value in variable #10001 equals 0.0.
`WHILE [#10101 LT 10] DO1 ;`	While variable #10101 is less than 10 repeat loop DO1..END1.
`#10001=[1.0 LT 5.0] ;`	Variable #10001 is set to 1.0 (TRUE).
`IF [#10001 AND #10002 EQ #10003] GOTO1 ;`	If variable #10001 AND variable #10002 are equal to the value in #10003 then control jumps to block 1.

Arithmetic Operators

Arithmetic operators consist of unary and binary operators. They are:

+	- Unary plus	+1.23
-	- Unary minus	-[COS[30]]

+	- Binary addition	#10001=#10001+5
-	- Binary subtraction	#10001=#10001-1
*	- Multiplication	#10001=#10002*#10003
/	- Division	#10001=#10002/4
MOD	- Remainder	#10001=27 MOD 20 (#10001 contains 7)

Logical Operators

Logical operators are operators that work on binary bit values. Macro variables are floating point numbers. When logical operators are used on macro variables, only the integer portion of the floating point number is used. The logical operators are:

`OR` - logically OR two values together

`XOR` - Exclusively OR two values together

`AND` - Logically AND two values together

Examples:

```
%
#10001=1.0 ;
#10002=2.0 ;
#10003=#10001 OR #10002 ;
%
```

Here the variable `#10003` will contain 3.0 after the `OR` operation.

```
%
#10001=5.0 ;
#10002=3.0 ;
IF [[#10001 GT 3.0] AND [#10002 LT 10]] GOTO1 ;
%
```

Here control transfers to block 1 because `#10001 GT 3.0` evaluates to 1.0 and `#10002 LT 10` evaluates to 1.0, thus 1.0 `AND` 1.0 is 1.0 (TRUE) and the GOTO occurs.

NOTE: *To achieve your desired results, be very careful when you use logical operators.*

Expressions

Expressions are defined as any sequence of variables and operators surrounded by the square brackets [and]. There are two uses for expressions: conditional expressions or arithmetic expressions. Conditional expressions return FALSE (0.0) or TRUE (any non zero) values. Arithmetic expressions use arithmetic operators along with functions to determine a value.

Arithmetic Expressions

An arithmetic expression is any expression using variables, operators, or functions. An arithmetic expression returns a value. Arithmetic expressions are usually used in assignment statements, but are not restricted to them.

Examples of Arithmetic expressions:

```
%
#10001=#10045*#10030 ;
#10001=#10001+1 ;
X[#10005+COS[#10001]] ;
#[#10200+#10013]=0 ;
%
```

Conditional Expressions

In the Haas control, all expressions set a conditional value. The value is either 0.0 (FALSE) or the value is nonzero (TRUE). The context in which the expression is used determines if the expression is a conditional expression. Conditional expressions are used in the IF and WHILE statements and in the M99 command. Conditional expressions can make use of Boolean operators to help evaluate a TRUE or FALSE condition.

The M99 conditional construct is unique to the Haas control. Without macros, M99 in the Haas control has the ability to branch unconditionally to any line in the current subprogram by placing a P code on the same line. For example:

```
N50 M99 P10 ;
```

branches to line N10. It does not return control to the calling subprogram. With macros enabled, M99 can be used with a conditional expression to branch conditionally. To branch when variable #10000 is less than 10 we could code the above line as follows:

```
N50 [#10000 LT 10] M99 P10 ;
```

In this case, the branch occurs only when #10000 is less than 10, otherwise processing continues with the next program line in sequence. In the above, the conditional M99 can be replaced with

```
N50 IF [#10000 LT 10] GOTO10 ;
```

Assignment Statements

Assignment statements let you modify variables. The format of the assignment statement is:

```
<expression>=<expression>
```

The expression on the left of the equal sign must always refer to a macro variable, whether directly or indirectly. This macro initializes a sequence of variables to any value. This example uses both direct and indirect assignments.

```
%
O50001 (INITIALIZE A SEQUENCE OF VARIABLES) ;
N1 IF [#2 NE #0] GOTO2 (B=base variable) ;
#3000=1 (Base variable not given) ;
N2 IF [#19 NE #0] GOTO3 (S=size of array) ;
#3000=2 (Size of array not given) ;
N3 WHILE [#19 GT 0] DO1 ;
#19=#19-1 (Decrement count) ;
#[#2+#19]=#22 (V=value to set array to) ;
END1 ;
M99 ;
%
```

You could use the above macro to initialize three sets of variables as follows:

```
%
G65 P300 B101. S20 (INIT 101..120 TO #0) ;
G65 P300 B501. S5 V1. (INIT 501..505 TO 1.0) ;
G65 P300 B550. S5 V0 (INIT 550..554 TO 0.0) ;
%
```

The decimal point in B101., etc. would be required.

Control Statements

Control statements allow the programmer to branch, both conditionally and unconditionally. They also provide the ability to iterate a section of code based on a condition.

Unconditional Branch (GOTOnnn and M99 Pnnnn)

In the Haas control, there are two methods of branching unconditionally. An unconditional branch will always branch to a specified block. `M99 P15` will branch unconditionally to block number 15. The `M99` can be used whether or not macros is installed and is the traditional method for branching unconditionally in the Haas control. `GOTO15` does the same as `M99 P15`. In the Haas control, a `GOTO` command can be used on the same line as other G-codes. The `GOTO` is executed after any other commands like M codes.

Computed Branch (GOTO#n and GOTO [expression])

Computed branching allows the program to transfer control to another line of code in the same subprogram. The control can compute the block while the program runs, using the `GOTO [expression]` form, or it can pass the block in through a local variable, as in the `GOTO#n` form.

The `GOTO` rounds the variable or expression result that is associated with the Computed branch. For instance, if variable `#1` contains 4.49 and the program contains a `GOTO#1` command, the control attempts to transfer to a block that contains `N4`. If `#1` contains 4.5, then the control transfers to a block that contains `N5`.

Example: You could develop this code skeleton into a program that adds serial numbers to parts:

```
%
O50002 (COMPUTED BRANCHING) ;
(D=Decimal digit to engrave) ;
;
IF [[#7 NE #0] AND [#7 GE 0] AND [#7 LE 9]] GOTO99 ;
#3000=1 (Invalid digit) ;
;
N99;
#7=FIX[#7] (Truncate any fractional part) ;
;
GOTO#7 (Now engrave the digit) ;
;
N0 (Do digit zero) ;
M99 ;
;
N1 (Do digit one) ;
;
M99 ;
%
```

With the above subprogram, you would use this call to engrave the fifth digit:

```
G65 P9200 D5 ;
```

Computed GOTOs using expression could be used to branch processing based on the results of reading hardware inputs. For example:

```
%
GOTO [[#1030*2]+#1031] ;
N0(1030=0, 1031=0) ;
...M99 ;
N1(1030=0, 1031=1) ;
...M99 ;
N2(1030=1, 1031=0) ;
...M99 ;
N3(1030=1, 1031=1) ;
...M99 ;
%
```

#1030 and #1031.

Conditional Branch (IF and M99 Pnnnn)

Conditional branching allows the program to transfer control to another section of code within the same subprogram. Conditional branching can only be used when macros are enabled. The Haas control allows two similar methods for accomplishing conditional branching:

```
IF [<conditional expression>] GOTOn
```

As discussed, <conditional expression> is any expression that uses any of the six Boolean operators EQ, NE, GT, LT, GE, or LE. The brackets surrounding the expression are mandatory. In the Haas control, it is not necessary to include these operators. For example:

```
IF [#1 NE 0.0] GOTO5 ;
```

could also be:

```
IF [#1] GOTO5 ;
```

In this statement, if the variable #1 contains anything but 0.0, or the undefined value #0, then branching to block 5 occurs; otherwise, the next block is executed.

In the Haas control, a <conditional expression> is also used with the M99 Pnnnn format. For example:

```
G00 X0 Y0 [#1EQ#2] M99 P5;
```

Here, the conditional is for the M99 portion of the statement only. The machine tool is instructed to go to X0, Y0 whether or not the expression evaluates to True or False. Only the branch, M99, is executed based on the value of the expression. It is recommended that the IF GOTO version be used if portability is desired.

Conditional Execution (IF THEN)

Execution of control statements can also be achieved by using the IF THEN construct. The format is:

```
IF [<conditional expression>] THEN <statement> ;
```

NOTE: *To preserve compatibility with FANUC syntax THEN may not be used with GOTOn.*

This format is traditionally used for conditional assignment statements such as:

```
IF [#590 GT 100] THEN #590=0.0 ;
```

Variable #590 is set to zero when the value of #590 exceeds 100.0. In the Haas control, if a conditional evaluates to FALSE (0.0), then the remainder of the IF block is ignored. This means that control statements can also be conditioned so that we could write something like:

```
IF [#1 NE #0] THEN G01 X#24 Y#26 F#9 ;
```

This executes a linear motion only if variable #1 has been assigned a value. Another example is:

```
IF [#1 GE 180] THEN #101=0.0 M99 ;
```

This says that if variable #1 (address A) is greater than or equal to 180, then set variable #101 to zero and return from the subprogram.

Here is an example of an IF statement that branches if a variable has been initialized to contain any value. Otherwise, processing continues and an alarm is generated. Remember, when an alarm is generated, program execution is halted.

```
%
N1 IF [#9NE#0] GOTO3 (TEST FOR VALUE IN F) ;
N2 #3000=11(NO FEED RATE) ;
N3 (CONTINUE) ;
%
```

Iteration/Looping (WHILE DO END)

Essential to all programming languages is the ability to execute a sequence of statements a given number of times or to loop through a sequence of statements until a condition is met. Traditional G coding allows this with the use of the L address. A subprogram can be executed any number of times by using the L address.

```
M98 P2000 L5 ;
```

This is limited since you cannot terminate execution of the subprogram on condition. Macros allow flexibility with the WHILE-DO-END construct. For example:

```
%
WHILE [<conditional expression>] DOn ;
<statements> ;
ENDn ;
%
```

This executes the statements between DOn and ENDn as long as the conditional expression evaluates to True. The brackets in the expression are necessary. If the expression evaluates to False, then the block after ENDn is executed next. WHILE can be abbreviated to WH. The DOn-ENDn portion of the statement is a matched pair. The value of n is 1-3. This means that there can be no more than three nested loops per subprogram. A nest is a loop within a loop.

Although nesting of WHILE statements can only be up to three levels, there really is no limit since each subprogram can have up to three levels of nesting. If there is a need to nest to a level greater than 3, then the segment containing the three lowest levels of nesting can be made into a subprogram thus overcoming the limitation.

If two separate WHILE loops are in a subprogram, they can use the same nesting index. For example:

```
%
#3001=0 (WAIT 500 MILLISECONDS) ;
WH [#3001 LT 500] DO1 ;
END1 ;
<Other statements>
#3001=0 (WAIT 300 MILLISECONDS) ;
WH [#3001 LT 300] DO1 ;
END1 ;
%
```

You can use GOTO to jump out of a region encompassed by a DO-END, but you cannot use a GOTO to jump into it. Jumping around inside a DO-END region using a GOTO is allowed.

An infinite loop can be executed by eliminating the WHILE and expression. Thus,

```
%
DO1 ;
<statements>
END1 ;
%
```

executes until the RESET key is pressed.

CAUTION: *The following code can be confusing:*

```
%
WH [#1] D01 ;
END1 ;
%
```

In this example, an alarm results indicating no Then was found; Then refers to the D01. Change D01 (zero) to DO1 (letter O).

6.7.6 Communication With External Devices - DPRNT[ ]

Macros allow additional capabilities to communicate with peripheral devices. With user provided devices you can digitize parts, provide runtime inspection reports, or synchronize controls.

Formatted Output

The DPRNT statement lets programs send formatted text to the serial port. DPRNT can print any text and any variable to the serial port. The form of the DPRNT statement is as follows:

```
DPRNT [<text> <#nnnn[wf]>... ] ;
```

DPRNT must be the only command in the block. In the previous example, <text> is any character from A to Z or the letters (+,-,/,*, and the space). When an asterisk is output, it is converted to a space. The <#nnnn[wf]> is a variable followed by a format. The variable number can be any macro variable. The format [wf] is required and consists of two digits within square brackets. Remember that macro variables are real numbers with a whole part and a fractional part. The first digit in the format designates the total places reserved in the output for the whole part. The second digit designates the total places reserved for the fractional part. The control can use any number from 0-9 for both whole and fractional parts.

A decimal point is printed out between the whole part and the fractional part. The fractional part is rounded to the least significant place. When zero places are reserved for the fractional part, then no decimal point is printed out. Trailing zeros are printed if there is a fractional part. At least one place is reserved for the whole part, even when a zero is used. If the value of the whole part has fewer digits than have been reserved, then leading spaces are output. If the value of the whole part has more digits than has been reserved, then the field is expanded so that these numbers are printed.

The control sends a carriage return after every DPRNT block.

DPRNT[ ] Example:

Code	Output
`#1= 1.5436 ;`	
`DPRNT[X#1[44]*Z#1[03]*T#1[40]] ;`	X1.5436 Z 1.544 T 1
`DPRNT[***MEASURED*INSIDE*DIAMETER***] ;`	MEASURED INSIDE DIAMETER
`DPRNT[] ;`	(no text, only a carriage return)

Code	Output
`#1=123.456789 ;`	
`DPRNT[X-#1[35]] ;`	X-123.45679 ;

DPRNT[ ] Settings

Setting 261 determines the destination for DPRNT statements. You can choose to output them to a file, or to a TCP port. Settings 262 and 263 specify the destination for DPRNT output. Refer to the Settings section of this manual for more information.

Execution

`DPRNT` statements are executed at look-ahead time. This means that you must be careful about where the `DPRNT` statements appear in the program, particularly if the intent is to print out.

`G103` is useful for limiting lookahead. If you wanted to limit look-ahead interpretation to one block, you would include this command at the start of your program: This causes the control to look ahead (2) blocks.

```
G103 P1 ;
```

To cancel the lookahead limit, change the command to `G103 P0`. `G103` cannot be used when cutter compensation is active.

Editing

Improperly structured or improperly placed macro statements will generate an alarm. Be careful when editing expressions; brackets must be balanced.

The `DPRNT[ ]` function can be edited much like a comment. It can be deleted, moved as a whole item, or individual items within the bracket can be edited. Variable references and format expressions must be altered as a whole entity. If you wanted to change [24] to [44], place the cursor so that [24] is highlighted, enter [44] and press **[ENTER]**. Remember, you can use the jog handle to maneuver through long `DPRNT[ ]` expressions.

Addresses with expressions can be somewhat confusing. In this case, the alphabetic address stands alone. For instance, this block contains an address expression in `X`:

```
G01 X [COS [90]] Z3.0 (CORRECT) ;
```

Here, the X and brackets stand-alone and are individually editable items. It is possible, through editing, to delete the entire expression and replace it with a floating-point constant.

```
G01 X 0 Z3.0 (WRONG) ;
```

The above block will result in an alarm at runtime. The correct form looks as follows:

```
G01 X0 Z3.0 (CORRECT) ;
```

NOTE: *There is no space between the X and the Zero (0). REMEMBER when you see an alpha character standing alone it is an address expression.*

6.7.7 G65 Macro Subprogram Call Option (Group 00)

G65 is the command that calls a subprogram with the ability to pass arguments to it. The format follows:

```
G65 Pnnnnn [Lnnnn] [arguments] ;
```

Arguments italicized in square brackets are optional. See the Programming section for more details on macro arguments.

The G65 command requires a P address corresponding to a program number currently located in the control's drive or path to a program. When the L address is used the macro call is repeated the specified number of times.

When a subprogram is called, the control looks for the subprogram on the active drive or the path to the program. If the subprogram cannot be located on the active drive, the control looks in the drive designated by Setting 251. Refer to the Setting Up Search Locations section for more information on subprogram searching. An alarm occurs if the control does not find the subprogram.

In Example 1, subprogram 1000 is called once without conditions passed to the subprogram. G65 calls are similar to, but not the same as, M98 calls. G65 calls can be nested up to 9 times, which means, program 1 can call program 2, program 2 can call program 3 and program 3 can call program 4.

Example 1:

```
%
G65 P1000 (Call subprogram O01000 as a macro) ;
M30 (Program stop) ;
O01000 (Macro Subprogram) ;
...
M99 (Return from Macro Subprogram) ;
%
```

In Example 2, the program LightHousing.nc is called using the path that it is in.

Example 2:

```
%
G65 P15 A1. B1.;
G65 (/Memory/LightHousing.nc) A1. B1.;
```

NOTE: *Paths are case sensitive.*

6.7.8 Aliasing

Aliased codes are user defined G and M-codes that reference a macro program. There are 10 G alias codes and 10 M alias codes available to users. Program numbers 9010 through 9019 are reserved for G-code aliasing and 9000 through 9009 are reserved for M-code aliasing.

Aliasing is a means of assigning a G-code or M-code to a `G65 P#####` sequence. For instance, in the previous Example 2, it would be easier to write:

```
G06 X.5 Y.25 Z.05 F10. T10 ;
```

When aliasing, variables can be passed with a G-code; variables cannot be passed with an M-code.

Here, an unused G-code has been substituted, `G06` for `G65 P9010`. In order for the previous block to work, the value associated with subprogram `9010` must be set to 06. Refer to the Setting Aliases section for how to setup aliases.

NOTE: *`G00`, `G65`, `G66`, and `G67` cannot be aliased. All other codes between 1 and 255 can be used for aliasing.*

If a macro call subprogram is set to a G-code and the subprogram is not in memory, then an alarm is given. Refer to the G65 Macro Subprogram Call section on page **280** on how to locate the subprogram. An alarm occurs if the sub-program is not found.

Setting Aliases

The G-code or M-code alias setup is done on the Alias Codes window. To setup an alias:

1. Press **[SETTING]** and navigate to the **Alias Codes** tab.
2. Press **[EMERGENCY STOP]** on the control.
3. Using the cursor keys select the M or G Macro Call to be used.
4. Enter the number of the G-code or M-code you want to alias. For example, if you want to alias G06 type 06.
5. Press **[ENTER]**.
6. Repeat steps 3 - 5 for other aliased G or M-codes.
7. Release the **[EMERGENCY STOP]** on the control.

Setting an alias value to 0 disables aliasing for the associated subprogram.

F6.10: Alias Codes Window

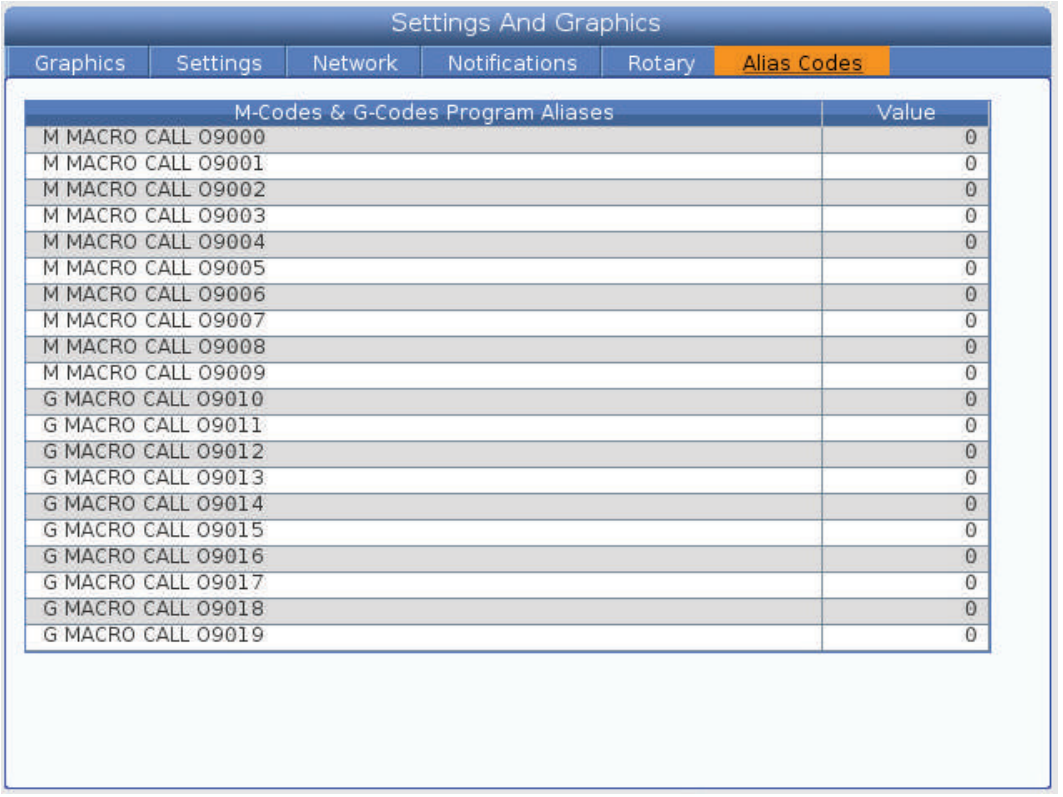

6.8 Shape Creator

Shape creator lets you quickly draw program shapes and tool paths. To create a new shape, press **[EDIT]** and then select the **`Shape Creator`** tab. If you already created a shape profile, go to list program User Data, My Profiles folder and select the shape creator file. Press **[SELECT PROGRAM]** to continue editing the shape.

F6.11: Shape Creator Screen.

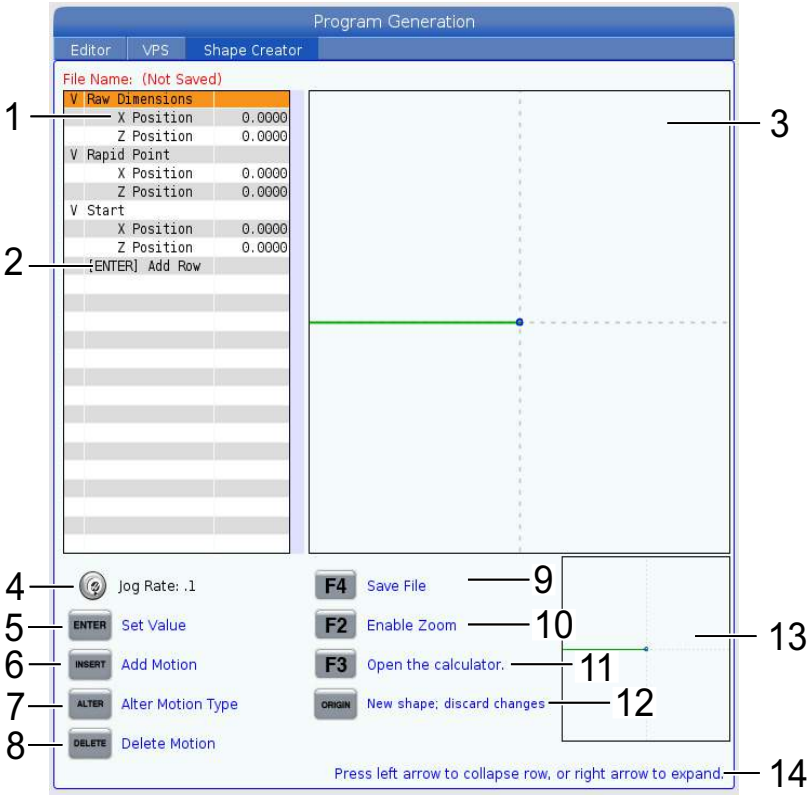

1. Motion variables.
2. Press **[ENTER]** to add a new row.
3. Shape Creator drawing board.
4. Handle Jog Rate
5. Press **[ENTER]** to set the value.
6. Press **[INSERT]** to insert a motion: Linear Feed Motion, CW Circular Feed Motion, CCW Circular Feed Motion.
7. Highlight the desired Motion and Press **[ALTER]** button to change to a different motion type.
8. Highlight the desired Motion and Press **[DELETE]** button to delete the motion.

9. Press **[F4]** then type in a name to save the Shape Generator file. It will save the file in the **`User Data`**/My Profiles/ folder.
10. Press **[F2]** button to Enable Zoom
11. Press **[F3]** button to open the calculator function.
12. Press **[ORIGIN]** button to do a new shape or discard the changes made.
13. Zoom view box.
14. Help text.

6.8.1 Using Shape Creator

The following is an example using shape creator to generate a simple OD rough turning profile.

F6.12: Shape Creator Example.

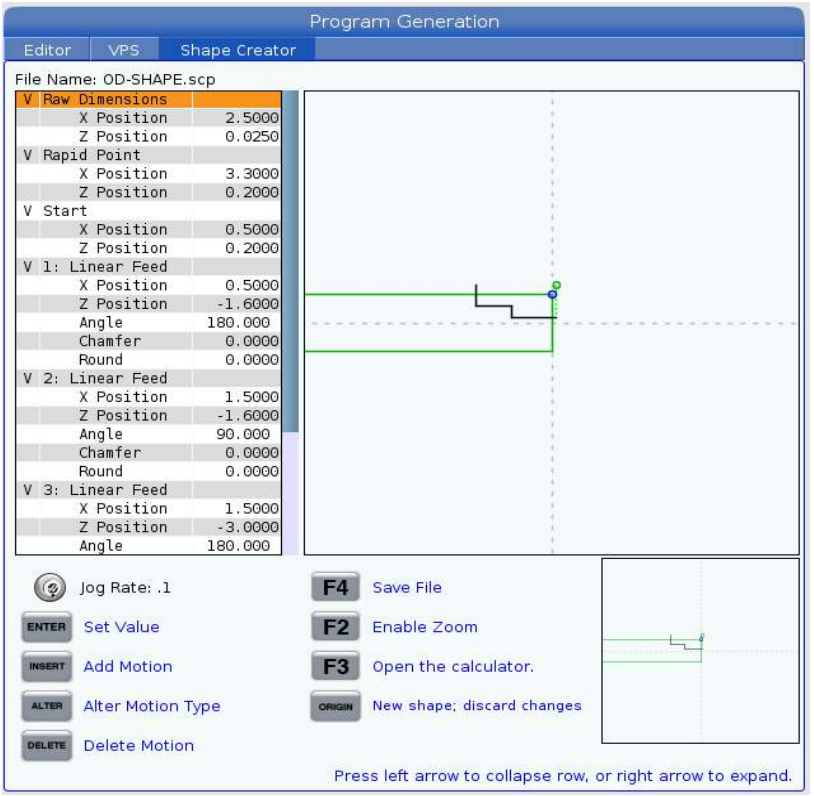

1. Press the **[EDIT]** button and right cursor to the Shape Creatortab.
2. Use the jog wheel to set the values. Set the Raw Dimension Positions: **X Position** 2.5000, **Z Position** 0.0250.
3. Set the Rapid Point Positions: **X Position** 3.3000, **Z Position** 0.2000.
4. Set the Start Positions: **X Position** 0.5000, **Z Position** 0.2000.

5. Press **[ENTER]** to Add a row and select **1: Linear Feed Motion**.
6. Set the Linear Feed Positions: **X Position** 0.5000, **Z Position** -1.6000, **Angle**180.000, **Chamfer** 0.0000, **Round** 0.0000.
7. Press **[ENTER]** to Add a row and select **1: Linear Feed Motion**.
8. Set the Linear Feed Positions: **X Position** 1.5000, **Z Position** -1.6000, **Angle**90.000, **Chamfer** 0.0000, **Round** 0.0000.
9. Press **[ENTER]** to Add a row and select **1: Linear Feed Motion**.
10. Set the Linear Feed Positions: **X Position** 1.5000, **Z Position** -3.0000, **Angle**180.000, **Chamfer** 0.0000, **Round** 0.0000.
11. Press **[ENTER]** to Add a row and select **1: Linear Feed Motion**.
12. Set the Linear Feed Positions: **X Position** 3.3000, **Z Position** -3.0000, **Angle**90.000, **Chamfer** 0.0000, **Round** 0.0000.
13. Press **[F4]** to save the shape profile. When finished the control will save the file to the User Data Tab, My Profiles Folder. See the next section to generate the G-Code program using the VPS template using this shape profile.

6.8.2 Using Shape Creator - VPS Template

This example will create a G-code program using the OD Profile Removal Cycles in the VPS templates.

F6.13: Shape Creator Example.

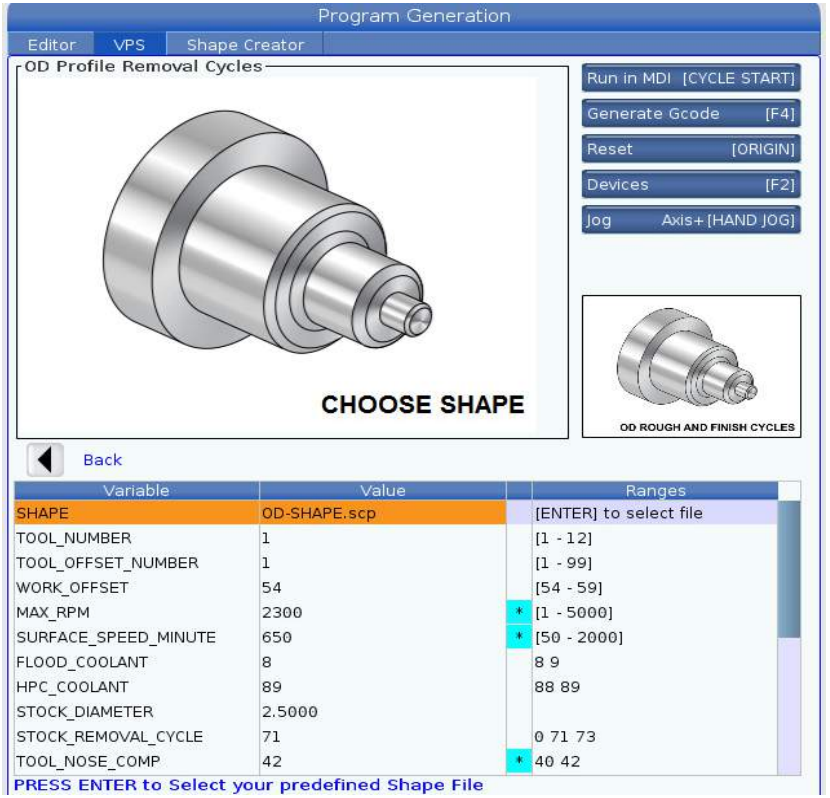

1. Press the **[EDIT]** button and left cursor to the VPS tab.
2. Go to the VPS folder and press the right cursor to see the templates.
3. Find the OD Profile Removal Cycles template and press the **[ENTER]** button.
4. For **SHAPE** press **[ENTER]** to select the Shape Creator file that was created on the previous section.
5. Set the **TOOL_NUMBER** to **1**.
6. Set the **TOOL_OFFSET_NUMBER** to **1**.
7. Enter the **WORK_OFFSET** number. In this example the value is **54**.
8. Set the **MAX_RPM** variable to: **2300**
9. Set the **SURFACE_SPEED_MINUTE** variable to: **650**
10. Set the **FLOOD _COOLANT** to: **8**.
11. Set the **HPC_COOLANT** variable to: **88**

12. Set the **STOCK_DIAMETER** is defined in the Shape Creator file.
13. Set the **STOCK_REMOVAL _CYCLE** variable to: **71**.
14. Set the **TOOL_NOSE_COMP** (Tool Nose Compensation) variable to: **42**.
15. Set the **DOC** (Depth of Cut) variable to: **0.05**
16. Set the **X_FINISH _STOCK** variable to: **0.01**
17. Set the **Z_FINISH_STOCK** variable to: **0.003**
18. Set the **FEEDRATE** variable to: **0.01**
19. The **X_RAPID_POINT** is defined in the Shape Creator file.
20. The **Z_RAPID_POINT** is defined in the Shape Creator file.
21. For the **RETRACT_X_HOME** enter **Y** to send the turret home in the X-Axis or **N** to enter the Z-Axis Tool Change position value on the next line.
22. For the **RETRACT_Z_HOME** enter **Y** to send the turret home in the Z-Axis or **N** to enter the Z-Axis Tool Change position value on the next line.
23. Set the **END_M_CODE** variable to: **30** to end the program with an M30.
24. Press **[F4]** to Generate the G-code, and select **2** to Output to MDI.
25. Press the **[GRAPHICS]** button. Run the program and verify that the program runs with no alarms.

6.9 Visual Programming System (VPS)

VPS lets you quickly build programs from program templates. To access VPS, press **[EDIT]** and then select the **VPS** tab.

F6.14: VPS Starting Screen. [1] Recently Used Templates, [2] Template Directory Window, [3] **[ENTER]** to Load a Template, [4] **[F4]** to Switch Between Recently Used and Template Directory.

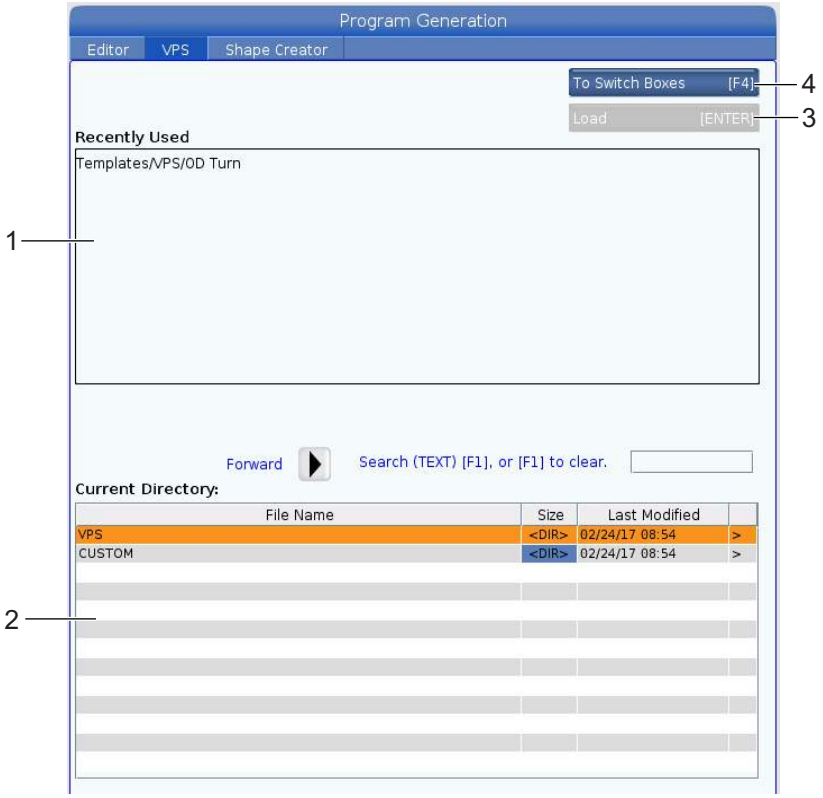

In the template directory window, you can choose from the **VPS** or **CUSTOM** directories. Highlight a directory name and press the **[RIGHT]** cursor arrow to see the directory's contents.

The VPS starting screen also lets you choose templates you have recently used. Press **[F4]** to change to the Recently Used window and highlight a template from the list. Press **[ENTER]** to load the template.

6.9.1 VPS Example

When you use VPS, you choose a template for the function you want to program, and then enter variables to create a program. The default templates include probing and part features. You can also create custom templates. Contact the Applications department at your HFO for help with custom templates.

In this example, we use a VPS template to program the **OD ROUGH PROFILING**. VPS templates all work in the same way: You first fill in values for the template variables, and you then output a program.

1. Press **[EDIT]**, and then select the **VPS** tab.
2. Use the cursor arrow keys to highlight the **VPS** menu option. Press the **[RIGHT]** cursor arrow key to select the option.
3. Highlight and select the **OD Rough Profiling** option from the next menu.

F6.15: VPS Engraving Program Generation Window Example. [1] Variable Illustration, [2] Variables Table, [3] Variable Description Text, [4] Default value was changed indicator, [5] Template Illustration, [6] Clear **[ORIGIN]**, [7] Generate G-code **[F4]**, [8] Run in MDI **[CYCLE START]**.

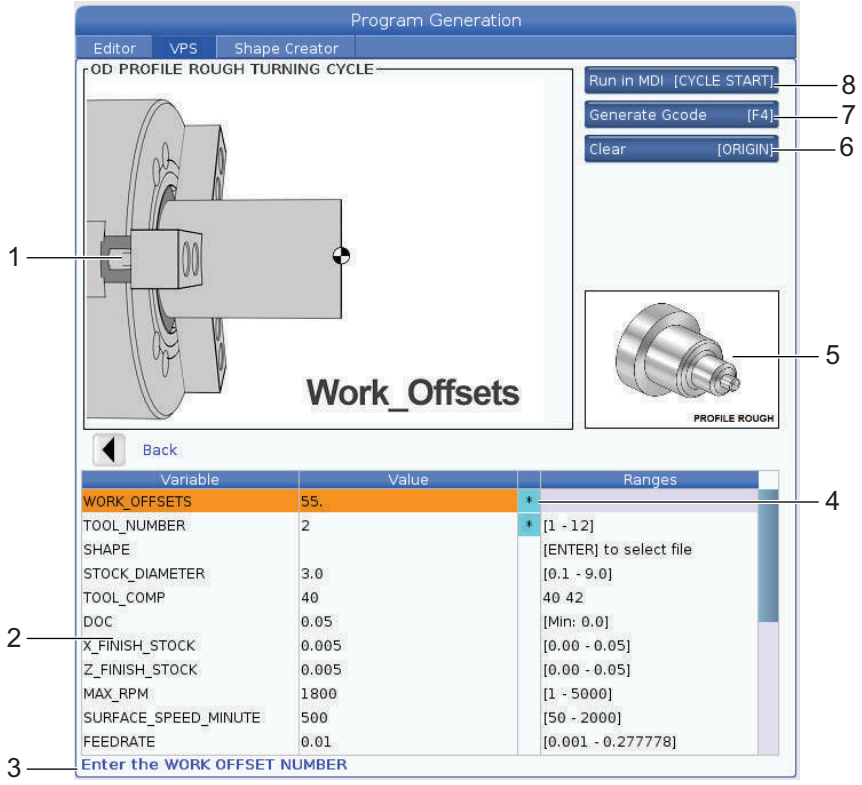

4. In the Program Generation window, use the **[UP]** and **[DOWN]** cursor arrow keys to highlight the variable rows.

5. Type a value for the highlighted variable and press **[ENTER]**. The control will display an asterisk (*) next to variable if the default value is changed. To set the variable back to default press the **[ORIGIN]** button.
6. Press the **[DOWN]** cursor arrow key to move to the next variable.
7. With all of the variables entered, you can press **[CYCLE START]** to immediately run the program in `MDI`, or **[F4]** to output the code to either the clipboard or `MDI` without running the program.

6.10 Y Axis

The Y Axis moves tools perpendicular to the spindle center line. This motion is achieved by compound motion of the X- and Y-Axis ballscrews.

Refer to `G17` and `G18`, starting on page **315**, for programming information.

F6.16: Y-Axis Motion: [1] Y-Axis compound motion, [2] Horizontal plane.

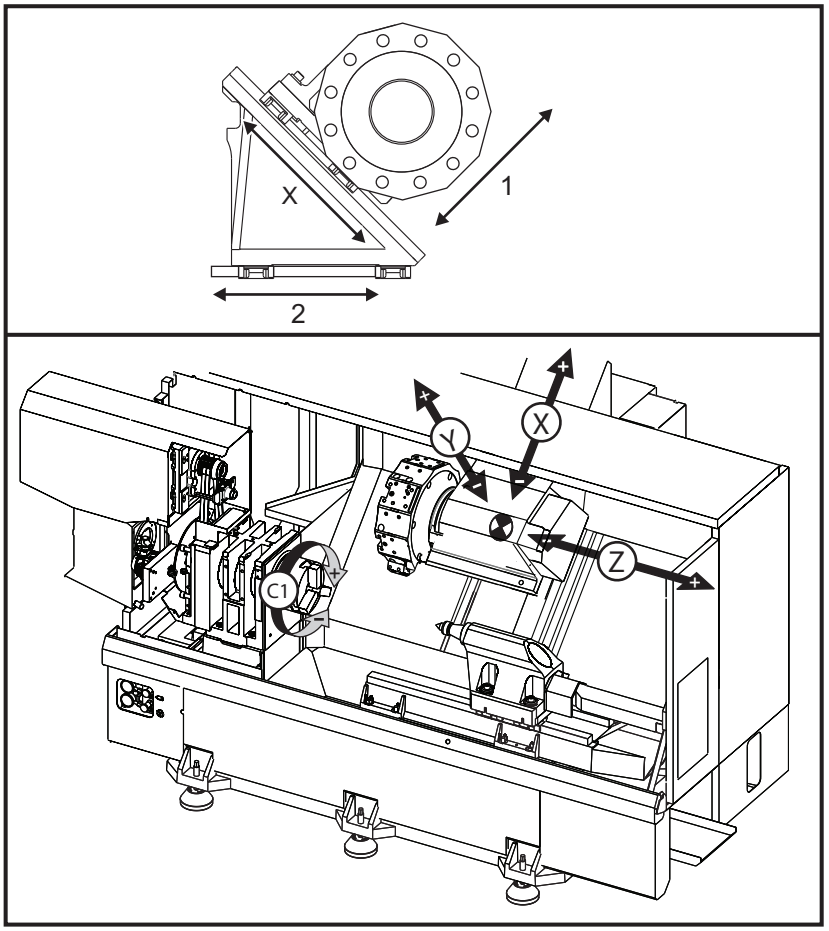

6.10.1 Y-Axis Travel Envelopes

You can find detailed work and travel envelope information for your machine at data.haascnc.com/install.

TIP: *This site can be accessed through www.haascnc.com, then scroll down to the bottom of the page and click on Machine Pre-Installation Guide.*

Select your machine model, and then click on "Download Detailed Layout Drawings for the... PDF".

When you set up tooling for the Y Axis, consider these factors:

- Work piece diameter
- Tool extension (radial tools)
- Required Y-Axis travel from the centerline

6.10.2 Y-Axis Lathe with VDI Turret

The position of the work envelope shifts when using radial live tools. The length the cutting tool extends from the centerline of the tool pocket is the distance the envelope shifts.

You can find detailed work and travel envelope information for your machine at data.haascnc.com/install.

TIP: *This site can be accessed through www.haascnc.com, then scroll down to the bottom of the page and click on Machine Pre-Installation Guide.*

Select your machine model, and then click on "Download Detailed Layout Drawings for the.. PDF".

6.10.3 Operation and Programming

The Y Axis is an additional axis on the lathes (if so equipped) that can be commanded and behaves in the same manner as the standard X and Z Axes. There is no activation command necessary for Y Axis.

The lathe automatically returns the Y Axis to spindle centerline after a tool change. Make sure the turret is correctly positioned before commanding rotation.

Standard Haas G-codes and M-codes are available when programming with the Y Axis.

Mill type cutter compensation can be applied in both G17 and G19 planes when performing live tool operations. Cutter compensation rules must be followed to avoid unpredictable motion when applying and canceling the compensation. The Radius value of the Tool being used must be entered in the **RADIUS** column of the tool geometry page for that tool. The tool tip is assumed as “0” and no value should be entered.

Programming recommendations:

- Command Axes home or to a safe tool change location in rapids using G53 which moves all axes at the same rate simultaneously. Regardless of the positions of the Y Axis and X Axis in relation to each other, both move at the MAX possible speed towards commanded position and usually do not finish at the same time. For example:

```
G53 X0 (command for home) ;
G53 X-2.0 (command for X to be 2" from home) ;
G53 X0 Y0 (command for home) ;
```

Refer to G53 on page **322**.

If commanding the Y and X Axes home using G28 the following conditions must be met and the described behavior expected:

– Address identification for G28:
X = U

Y = Y

Z = W

B = B

C = H

Example:

G28 U0 (U Zero) ; sends the X Axis to home position.

G28 U0 ; is okay with Y Axis below spindle centerline.

G28 U0 ; produces a 560 alarm if Y Axis is above spindle centerline. However homing the Y Axis first or utilizing a G28 without a letter address does not generate the 560 alarm.

G28 ; sequence sends X, Y, and B home first then C and Z

G28 U0 Y0 ; produces no alarm regardless of the Y-Axis position.

G28 Y0 ; is okay with Y Axis above spindle centerline.

G28 Y0 ; is okay with Y Axis below spindle centerline

Pressing **[POWER UP/RESTART]** or **[HOME G28]** produces the message: *Function locked*.

– If X Axis is commanded home while the Y Axis is above spindle centerline (positive Y-Axis coordinates), alarm 560 is generated. Command Y Axis home first, then X Axis.
– If X Axis is commanded home and the Y Axis is below spindle centerline (negative Y-Axis coordinates), the X Axis goes home and Y does not move.
– If both X Axis and Y Axis are commanded home using `G28 U0 Y0`, the X Axis and Y Axis go home at the same time regardless of Y being above or below the centerline.

• Clamp the main and/or secondary spindles (if so equipped) anytime live tooling operations are being performed and C Axis is not being interpolated.

NOTE: *The brake unclamps automatically any time C-Axis motion for positioning is commanded.*

• These canned cycles can be used with the Y Axis. Refer to page **302** for more information.
Axial Only Cycles:

– Drilling: `G74`, `G81`, `G82`, `G83`,
– Boring: `G85`, `G89`,
– Tapping: `G95`, `G186`,

Radial Only Cycles:

– Drilling: `G75` (a grooving cycle), `G241`, `G242`, `G243`,
– Boring: `G245`, `G246`, `G247`, `G248`
– Tapping: `G195`, `G196`

Program Example of Y-Axis Milling:

F6.17: Y-axis Milling Program Example: [1] Feed, [2] Rapid.

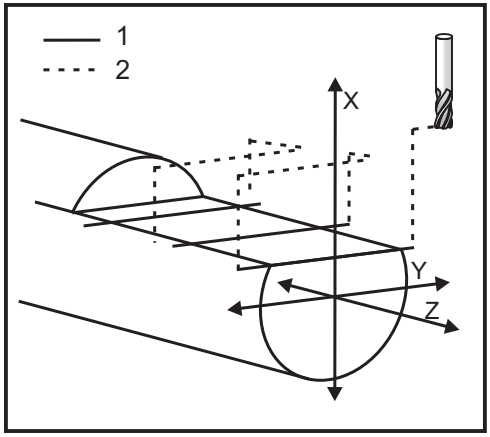


```
o50004 (Y AXIS MILLING) ;
```

```
(G54 X0 Y0 is at the center of rotation) ;
(Z0 is on face of the part) ;
(T1 is an end mill) ;
(BEGIN PREPARATION BLOCKS) ;
T101 (Select tool and offset 1) ;
G00 G18 G20 G40 G80 G99 (Safe startup) ;
G19 (Call YZ plane) ;
G98 (Feed per min) ;
G00 G54 X4. C90. Y0. Z0.1 ;
(Rapid to clear position) ;
M14 (Spindle brake on) ;
P1500 M133 (Live tool CW at 1500 RPM) ;
M08 (Coolant on) ;
(BEGIN CUTTING BLOCKS) ;
G00 X3.25 Y-1.75 Z0. (Rapid move) ;
G00 X2.25 (Rapid approach) ;
G01 Y1.75 F22. (Linear feed) ;
G00 X3.25 (Rapid retract) ;
G00 Y-1.75 Z-0.375 (Rapid move) ;
G00 X2.25 (Rapid approach) ;
G01 Y1.75 F22. (Linear feed) ;
G00 X3.25 (Rapid retract) ;
G00 Y-1.75 Z-0.75 (Rapid move) ;
G00 X2.25 (Rapid approach) ;
G01 Y1.75 F22. (Linear feed) ;
(BEGIN COMPLETION BLOCKS) ;
G00 X3.25 M09 (Rapid retract, Coolant off) ;
M15 (Spindle brake off) ;
M135 (Live tool off) ;
G18 (Return to XZ plane) ;
G53 X0 Y0 (X & Y Home) ;
G53 Z0 (Z Home) ;
M30 (End program) ;
```

6.11 More Information Online

For updated and supplemental information, including tips, tricks, maintenance procedures, and more, visit the Haas Service page at www.HaasCNC.com. You can also scan the code below with your mobile device to go directly to the Haas Service page:

Chapter 7: G-codes

7.1 Introduction

This chapter gives detailed descriptions of the G-codes that you use to program your machine.

7.1.1 List of G-codes

CAUTION: *The sample programs in this manual have been tested for accuracy, but they are for illustrative purposes only. The programs do not define tools, offsets, or materials. They do not describe workholding or other fixturing. If you choose to run a sample program on your machine, do so in Graphics mode. Always follow safe machining practices when you run an unfamiliar program.*

NOTE: *The sample programs in this manual represent a very conservative programming style. The samples are intended to demonstrate safe and reliable programs, and they are not necessarily the fastest or most efficient way to operate a machine. The sample programs use G-codes that you might choose not to use in more efficient programs.*

Code	Description	Group	Page
G00	Rapid Motion Positioning	01	**303**
G01	Linear Interpolation Motion	01	**304**
G02	CW Circular Interpolation Motion	01	**311**
G03	CCW Circular Interpolation Motion	01	**311**
G04	Dwell	00	**313**
G09	Exact Stop	00	**314**
G10	Set Offsets	00	**314**
G14	Secondary Spindle Swap	17	**315**

Code	Description	Group	Page
G15	Secondary Spindle Swap Cancel	17	**315**
G17	XY Plane	02	**315**
G18	XZ Plane	02	**315**
G19	YZ Plane	02	**315**
G20	Select Inches	06	**316**
G21	Select Metric	06	**316**
G28	Return To Machine Zero Point	00	**316**
G29	Return From Reference Point	00	**316**
G31	Skip Function	00	**316**
G32	Thread Cutting	01	**317**
G40	Tool Nose Compensation Cancel	07	**320**
G41	Tool Nose Compensation (TNC) Left	07	**321**
G42	Tool Nose Compensation (TNC) Right	07	**321**
G50	Spindle Speed Limit	00	**321**
G50	Set Global coordinate Offset FANUC	00	**322**
G52	Set Local Coordinate System FANUC	00	**322**
G53	Machine Coordinate Selection	00	**322**
G54	Coordinate System #1 FANUC	12	**322**
G55	Coordinate System #2 FANUC	12	**322**
G56	Coordinate System #3 FANUC	12	**322**
G57	Coordinate System #4 FANUC	12	**322**
G58	Coordinate System #5 FANUC	12	**322**
G59	Coordinate System #6 FANUC	12	**322**

Code	Description	Group	Page
G61	Exact Stop Modal	15	**323**
G64	Exact Stop Cancel G61	15	**323**
G65	Macro Subprogram Call Option	00	**323**
G70	Finishing Cycle	00	**323**
G71	O.D./I.D. Stock Removal Cycle	00	**324**
G72	End Face Stock Removal Cycle	00	**327**
G73	Irregular Path Stock Removal Cycle	00	**331**
G74	End Face Grooving Cycle	00	**333**
G75	O.D./I.D. Grooving Cycle	00	**336**
G76	Threading Cycle, Multiple Pass	00	**339**
G80	Canned Cycle Cancel	09	**342**
G81	Drill Canned Cycle	09	**343**
G82	Spot Drill Canned Cycle	09	**343**
G83	Normal Peck Drilling Canned Cycle	09	**345**
G84	Tapping Canned Cycle	09	**347**
G85	Boring Canned Cycle	09	**350**
G86	Bore and Stop Canned Cycle	09	**351**
G89	Bore and Dwell Canned Cycle	09	**351**
G90	O.D./I.D. Turning Cycle	01	**352**
G92	Threading Cycle	01	**353**
G94	End Facing Cycle	01	**355**
G95	Live Tooling Rigid Tap (Face)	09	**356**
G96	Constant Surface Speed On	13	**357**

Code	Description	Group	Page
G97	Constant Surface Speed Off	13	**357**
G98	Feed Per Minute	10	**357**
G99	Feed Per Revolution	10	**357**
G100	Disable Mirror Image	00	**358**
G101	Enable Mirror Image	00	**358**
G103	Limit Block Lookahead	00	**358**
G105	Servo Bar Command	09	**359**
G107	G107 Cylindrical Mapping	00	**359**
G110	Coordinate System #7	12	**361**
G111	Coordinate System #8	12	**361**
G112	XY to XC Interpolation	04	**357**
G113	Cancel G112	04	**362**
G114	Coordinate System #9	12	**362**
G115	Coordinate System #10	12	**362**
G116	Coordinate System #11	12	**362**
G117	Coordinate System #12	12	**362**
G118	Coordinate System #13	12	**362**
G119	Coordinate System #14	12	**362**
G120	Coordinate System #15	12	**362**
G121	Coordinate System #16	12	**362**
G122	Coordinate System #17	12	**362**
G123	Coordinate System #18	12	**362**
G124	Coordinate System #19	12	**362**

Code	Description	Group	Page
G125	Coordinate System #20	12	**362**
G126	Coordinate System #21	12	**362**
G127	Coordinate System #22	12	**362**
G128	Coordinate System #23	12	**362**
G129	Coordinate System #24	12	**362**
G154	Select Work Coordinates P1-99	12	**362**
G156	Broaching Canned Cycle	09	**364**
G167	Modify Setting	00	**370**
G184	Reverse Tapping Canned Cycle For Left Hand Threads	09	**371**
G186	Reverse Live Tool Rigid Tap (For Left Hand Threads)	09	**371**
G187	Accuracy Control	00	**372**
G195	Forward Live Tool Radial Tapping (Diameter)	09	**373**
G196	Reverse Live Tool Radial Tapping (Diameter)	09	**373**
G198	Disengage Synchronous Spindle Control	00	**355**
G199	Engage Synchronous Spindle Control	00	**374**
G200	Index on the Fly	00	**376**
G211	Manual Tool Setting	-	**378**
G212	Auto Tool Setting	-	**378**
G241	Radial Drill Canned Cycle	09	**379**
G242	Radial Spot Drill Canned Cycle	09	**380**
G243	Radial Normal Peck Drilling Canned Cycle	09	**382**
G245	Radial Boring Canned Cycle	09	**384**
G246	Radial Bore and Stop Canned Cycle	09	**385**

Code	Description	Group	Page
G249	Radial Bore and Dwell Canned Cycle	09	**388**
G266	Visible Axes Linear Rapid %Motion	00	**389**

Introduction to G-codes

G-codes are used to command specific actions for the machine: such as simple machine moves or drilling functions. They also command more complex features which can involve optional live tooling and the C Axis.

Each G-code has a group number. Each group of codes contains commands for a specific subject. For example, Group 1 G-codes command point-to point moves of the machine axes, Group 7 are specific to the Cutter Compensation feature.

Each group has a dominant G-code; referred to as the default G-code. A default G-code means they are the one in each group the machine uses unless another G-code from the group is specified. For example programming an X, Z move like this, `X-2. Z-4.` will position the machine using `G00`.

NOTE: *Proper programming technique is to preface all moves with a G-code.*

Default G-codes for each group are shown on the **`Current Commands`** screen under **`All Active Codes`**. If another G-code from the group is commanded (active), that G-code is displayed on the **`All Active Codes`** screen.

G-code commands are either modal or non-modal. A modal G-code stays in effect until the end of the program or until you command another G-code from the same group. A non-modal G-code affects only the line it is in; it does not affect the next program line. Group 00 codes are non-modal; the other groups are modal.

NOTE: *The Haas Intuitive Programming System (IPS) is a programming mode that either hides G-codes or completely bypasses the use of G-codes.*

Canned Cycles

Canned cycles simplify part programming. Most common Z-axis repetitive operations, such as drilling, tapping, and boring, have canned cycles. When active, a canned cycle executes at every new axis position. Canned cycles execute axis motions as rapid commands (`G00`) and the canned cycle operation is performed after the axis motion. This applies to `G17`, `G19` cycles, and Y-Axis movements on Y-Axis lathes.

Using Canned Cycles

Modal canned cycles stay in effect after you define them, and they execute in the Z-axis for each position of the X, Y, and C-Axes.

NOTE: *X, Y, or C-Axis positioning moves during a canned cycle are rapid moves.*

Canned cycles operate differently, depending on whether you use incremental (U,W) or absolute (X, Y, or C) positions.

If you define a loop count (`Lnn` code number) in the canned cycle block, the canned cycle repeats that many times with an incremental (`U` or `W`) move between each cycle.

Enter the number of repeats (`L`) each time you want to repeat a canned cycle. The control does not remember the number of repeats (`L`) for the next canned cycle.

You should not use spindle control M-codes while a canned cycle is active.

Canceling a Canned Cycle

`G80` cancels all canned cycles. `G00` or `G01` code also cancel a canned cycle. A canned cycle stays active until `G80`, `G00`, or `G01` cancels it.

Canned Cycles with Live Tooling

The canned cycles `G81`, `G82`, `G83`, `G85`, `G86`, `G87`, `G88`, `G89`, `G95`, and `G186` can be used with axial live tooling, and `G241`, `G242`, `G243`, `G245`, and `G249` can be used with radial live tooling. Some programs must be checked to be sure they turn on the main spindle before running the canned cycles.

NOTE: *`G84` and G184 are not usable with live tooling.*

G00 Rapid Motion Positioning (Group 01)

***B** - B-axis motion command
***C** - C-Axis motion command
***U** - X-axis incremental motion command
***W** - Z-axis incremental motion command
***X** - X-axis absolute motion command
***Y** - Y-axis absolute motion command
***Z** - Z-axis absolute motion command
* **E** - Optional code to specify the rapid rate of the block as a percent.

* indicates optional

This G code is used to move the machine's axes at the maximum speed. It is primarily used to quickly position the machine to a given point before each feed (cutting) command. This G code is modal, so a block with G00 causes all following blocks to be rapid motions until another cutting move is specified.

NOTE: *Generally, rapid motion will not be in a straight line. Each axis specified is moved at the same speed, but all axes will not necessarily complete their motions at the same time. The machine will wait until all motions are complete before starting the next command.*

G01 Linear Interpolation Motion (Group 01)

F - Feed rate
* **B** - B-axis motion command
* **C** - C-Axis motion command
* **U** - X-axis incremental motion command
* **W** - Z-axis incremental motion command
* **X** - X-axis absolute motion command
* **Y** - Y-axis absolute motion command
* **Z** - Z-axis absolute motion command
* **A** - Optional angle of movement (used with only one of X, Z, U, W)
* **I** - X-axis chamfering from Z to X (the sign does not matter, only for 90 degree turns)
* **K** - Z-axis chamfering from X to Z (the sign does not matter, only for 90 degree turns)

* **,C** - Distance from center of intersection where the chamfer begins (the sign does not matter, can chamfer non-90 degree lines)
* **,R / R** - Radius of the fillet or arc (the sign does not matter)

This G code provides for straight line (linear) motion from point to point. Motion can occur in 1 or more axes. You can command a G01 with 3 or more axes All axes will start and finish motion at the same time. The speed of all axes is controlled so that the feed rate specified is achieved along the actual path. The C-Axis may also be commanded and this will provide a helical (spiral) motion. A C-Axis feed rate is dependent on the C-Axis diameter setting (Setting 102) to create a helical motion. The F address (feedrate) command is modal and may be specified in a previous block. Only the axes specified are moved.

Corner Rounding and Chamfering Example

A chamfer block or a corner rounding block can be automatically inserted between two linear interpolation blocks by specifying ,C (chamfering) or ,R (corner rounding).

NOTE: *Both of these variables use a comma symbol (,) before the variable.*

There must be a terminating linear interpolation block after the beginning block (a G04 pause may intervene). These two linear interpolation blocks specify a theoretical corner of intersection. If the beginning block specifies a ,C (comma C) the value after the C is the distance from the corner of intersection where the chamfer begins and also the distance from that same corner where the chamfer ends. If the beginning block specifies a ,R (comma R) the value after the R is the radius of a circle tangent to the corner at two points: the beginning of the corner rounding arc block that is inserted and the endpoint of that arc. There can be consecutive blocks with chamfer or corner rounding specified. There must be movement on the two axes specified by the selected plane (the active plane X-Y (G17), X-Z (G18) or Y-Z (G19). For chamfering a 90° angle only, an I or K value can be substituted where ,C is used.

F7.1: Chamfering

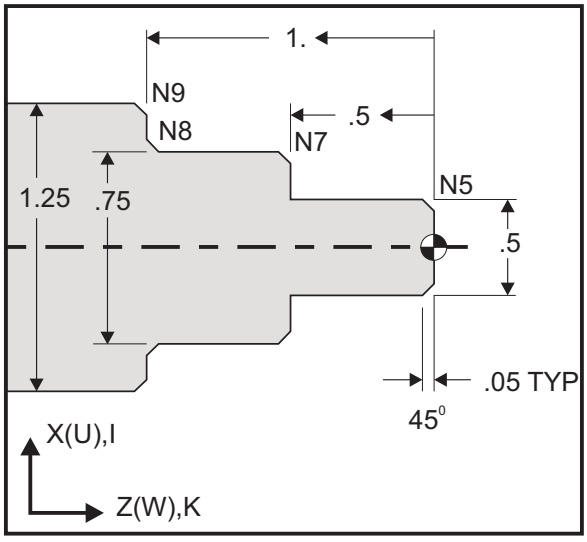


```
%
o60011 (G01 CHAMFERING) ;
(G54 X0 is at the center of rotation) ;
(Z0 is on the face of the part) ;
(T1 is an OD cutting tool) ;
(BEGIN PREPARATION BLOCKS) ;
T101 (Select tool and offset 1) ;
G00 G18 G20 G40 G80 G99 (Safe startup) ;
G50 S1000 (Limit spindle to 1000 RPM) ;
G97 S500 M03 (CSS off, Spindle on CW) ;
G00 G54 X0 Z0.25 (Rapid to 1st position) ;
M08 (Coolant on) ;
(BEGIN CUTTING BLOCKS) ;
G01 Z0 F0.005 (Feed to Z0) ;
N5 G01 X0.50 K-0.050 (Chamfer 1) ;
G01 Z-0.5 (Linear feed to Z-0.5) ;
```

```
N7 G01 X0.75 K-0.050 (Chamfer 2) ;
N8 G01 Z-1.0 I0.050 (Chamfer 3) ;
N9 G01 X1.25 K-0.050 (Chamfer 4) ;
G01 Z-1.5 (Feed to Z-1.5) ;
(BEGIN COMPLETION BLOCKS) ;
G00 X1.5 M09 (Rapid Retract, Coolant off) ;
G53 X0 (X home) ;
G53 Z0 M05 (Z home, spindle off) ;
M30 (End program) ;
%
```

This G-code syntax automatically includes a 45° chamfer or corner radius between two blocks of linear interpolation which intersect a right (90 degree) angle.

Chamfering Syntax

```
G01 X(U) x Kk ;
G01 Z(W) z Ii ;
```

Corner Rounding Syntax

```
G01 X(U) x Rr ;
G01 Z(W) z Rr ;
```

Addresses:

I = chamfering, Z to X

K = chamfering, X to Z

R = corner rounding (X or Z axis direction)

Notes:

1. Incremental programming is possible if `U` or `W` is specified in place of `X` or `Z`, respectively. So its actions are as follows:
   X(current position + i) = Ui

   Z(current position + k) = Wk

   X(current position + r) = Ur

   Z(current position + r) = Wr
2. Current position of X or Z Axis is added to the increment.
3. `I`, `K` and `R` always specify a radius value (radius programming value).

F7.2: Chamfering Code Z to X: [A] Chamfering, [B] Code/Example, [C] Movement.

A	B	C
1. Z+ to X+	X2.5 Z-2; G01 Z-0.5 I0.1; X3.5;	X2.5 Z-2; G01 Z-0.6; X2.7 Z-0.5; X3.5;
2. Z+ to X-	X2.5 Z-2.; G01 Z-0.5 I-0.1; X1.5;	X2.5 Z-2.; G01 Z-0.6; X2.3 Z-0.5; X1.5;
3. Z- to X+	X1.5 Z-0.5.; G01 Z-2. I0.1; X2.5;	X1.5 Z-0.5 G01 Z-1.9; X1.7 Z-2.; X2.5;
4. Z- to X-	X1.5 Z-0.5.; G01 Z-2. I-0.1; X0.5;	X1.5 Z-0.5; G01 Z-1.9; X1.3 Z-2. X0.5;

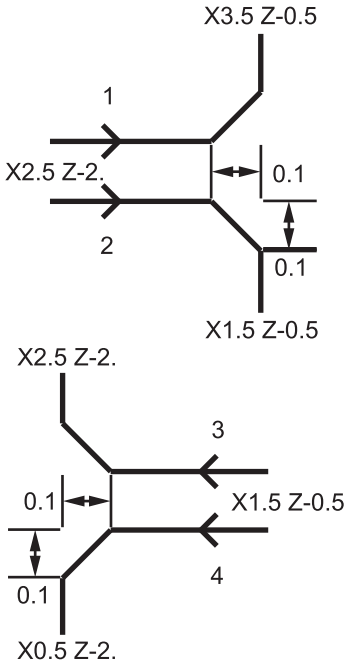

F7.3: Chamfering Code X to Z: [A] Chamfering, [B] Code/Example, [C] Movement.

A	B	C
1. X- to Z-	X1.5 Z-1.; G01 X0.5 K-0.1; Z-2.;	X1.5 Z-1.; G01 X0.7; X0.5 Z-1.1; Z-2.
2. X- to Z+	X1.5 Z-1.; G01 X0.5 K0.1; Z0.;	X1.5 Z-1.; G01 X0.7; X0.5 Z-0.9; Z0.;
3. X+ to Z-	X0.5 Z-1.; G01 X1.5 K-0.1; Z-2.;	X0.5 Z-1.; G01 X1.3; X1.5 Z-1.1; Z-2.
4. X+ to Z+	X0.5 Z-1.; G01 X1.5 K0.1; Z0.;	X0.5 Z-1.; G01 X1.3; X1.5 Z-0.9; Z0.;

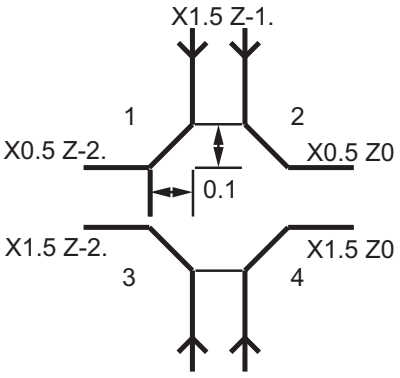

F7.4: Corner Rounding Code Z to X: [A] Corner rounding, [B] Code/Example, [C] Movement.

A	B	C
1. Z+ to X+	X2. Z-2.; G01 Z-1 R0.1; X3.;	X2. Z-2.; G01 Z-1.1; G03 X2.2 Z-1. R0.1; G01 X3.;
2. Z+ to X-	X2. Z-2.; G01 Z-1. R-0.1; X1.;	X2. Z-2.; G01 Z-1.1; G02 X1.8 Z-1 R0.1; G01 X1.;
3. Z- to X+	X2. Z-1.; G01 Z-2. R0.1; X3.;	X2. Z-1.; G01 Z-1.9; G02 X2.2 Z-2. R0.1; G01 X3.;
4. Z- to X-	X2. Z-1.; G01 Z-2. R-0.1; X1.;	X2. Z-1.; G01 Z-1.9; G03 X1.8 Z-2. R0.1; G01 X1.;

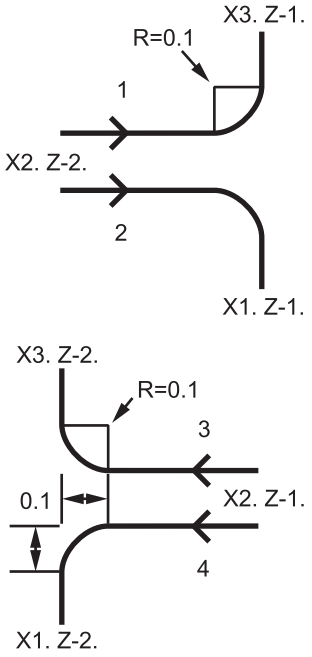

F7.5: Corner Rounding Code X to Z: [A] Corner rounding, [B] Code/Example, [C] Movement.

A	B	C
1. X- to Z-	X3. Z-1.; G01 X0.5 R-0.1; Z-2.;	X3. Z-1; G01 X0.7; G02 X0.5 Z-1.1 R0.1; G01 Z-2.;
2. X- to Z+	X3. Z-2.; G01 X0.5 R0.1; Z0.;	X3. Z-2.; G01 X0.7; G03 X0.5 Z-0.9 R01; G01 Z0.;
3. X+ to Z-	X1. Z-1.; G01 X1.5 R-0.1; Z-2.;	X1. Z-1.; G01 X1.3; G03 X1.5 Z-1.1 R0.1; G01 Z-2.;
4. X+ to Z+	X1. Z-2.; G01 X1.5 R0.1; Z0.;	X1. Z-21.; G01 X1.3; G02 X1.5 Z-0.9 R0.1; G01 Z0.;

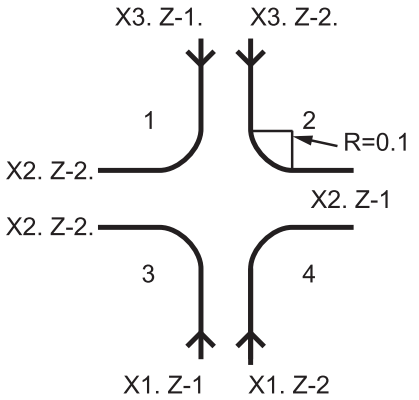

Rules:

1. Use `K` address only with `X(U)` address. Use `I` address only with `Z(W)` address.
2. Use `R` address with either `X(U)` or `Z(W)`, but not both in the same block.

3. Do not use I and K together on the same block. When using R address, do not use I or K.
4. The next block must be another single linear move that is perpendicular to the previous one.
5. Automatic chamfering or corner rounding cannot be used in a threading cycle or in a Canned cycle.
6. Chamfer or corner radius must be small enough to fit between the intersecting lines.
7. Use only a single X or Z-axis move in linear mode (G01) for chamfering or corner rounding.

G01 Chamfering with A

When specifying an angle (A), command motion in only one of the other axes (X or Z), the other axis is calculated based on the angle.

F7.6: G01 Chamfering with A: [1] Feed, [2] Rapid, [3] Start Point, [4] Finish Point.

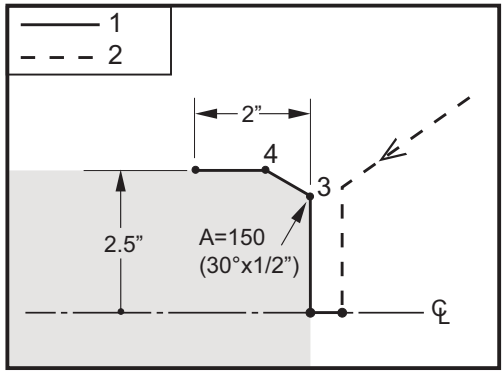


```
%
o60012 (G01 CHAMFERING WITH 'A') ;
(G54 X0 is at the center of rotation) ;
(Z0 is on the face of the part) ;
(T1 is an OD cutting tool) ;
(BEGIN PREPARATION BLOCKS) ;
T101 (Select tool and offset 1) ;
G00 G18 G20 G40 G80 G99 (Safe startup) ;
G50 S1000 (Limit spindle to 1000 RPM) ;
G97 S500 M03 (CSS off, Spindle on CW) ;
G00 G54 X4. Z0.1 (Rapid to clear position) ;
M08 (Coolant on) ;
X0 (Rapid to center of diameter) ;
(BEGIN CUTTING BLOCKS) ;
G01 Z0 F0.01 (Feed towards face) ;
G01 X4. (position 3) ;
X5. A150. (position 4) ;
```

```
Z-2. (Feed to back of part) ;
(BEGIN COMPLETION BLOCKS) ;
G00 X6. M09 (Rapid Retract, Coolant off) ;
G53 X0 (X home) ;
G53 Z0 M05 (Z home, spindle off) ;
M30 (End program) ;
%
```

NOTE: *A -30 = A150; A -45 = A135*

When specifying an angle (A), command motion in only one of the other axes (X or Z), the other axis is calculated based on the angle.

F7.7: G01 Chamfering with A: [1] Feed, [2] Rapid, [3] Start Point, [4] Finish Point.

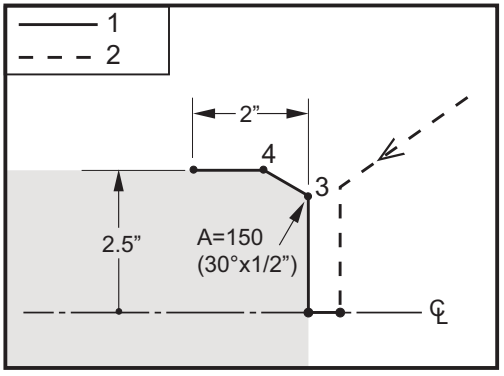


```
%
o60012 (G01 CHAMFERING WITH 'A') ;
(G54 X0 is at the center of rotation) ;
(Z0 is on the face of the part) ;
(T1 is an OD cutting tool) ;
(BEGIN PREPARATION BLOCKS) ;
T101 (Select tool and offset 1) ;
G00 G18 G20 G40 G80 G99 (Safe startup) ;
G50 S1000 (Limit spindle to 1000 RPM) ;
G97 S500 M03 (CSS off, Spindle on CW) ;
G00 G54 X4. Z0.1 (Rapid to clear position) ;
M08 (Coolant on) ;
X0 (Rapid to center of diameter) ;
(BEGIN CUTTING BLOCKS) ;
G01 Z0 F0.01 (Feed towards face) ;
G01 X4. (position 3) ;
X5. A150. (position 4) ;
```

```
Z-2. (Feed to back of part) ;
(BEGIN COMPLETION BLOCKS) ;
G00 X6. M09 (Rapid Retract, Coolant off) ;
G53 X0 (X home) ;
G53 Z0 M05 (Z home, spindle off) ;
M30 (End program) ;
%
```

NOTE: *A -30 = A150; A -45 = A135*

G02 CW/G03 CCW Circular Interpolation Motion (Group 01)

F - Feed rate
***I** - Distance along X-axis to center of circle
***J** - Distance along Y-axis to center of circle
***K** - Distance along Z-axis to center of circle
***R** - Radius of arc
***U** - X-axis incremental motion command
***W** - Z-axis incremental motion command
***X** - X-axis absolute motion command
***Y** - Y-axis absolute motion command
***Z** - Z-axis absolute motion command

* indicates optional

These G codes are used to specify a circular motion (CW or CCW) of the linear axes (Circular motion is possible in the X and Z axes as selected by `G18`). The `X` and `Z` values are used to specify the end point of the motion and can use either absolute (`X` and `Z`) or incremental motion (`U` and `W`). If either the `X` or `Z` is not specified, the endpoint of the arc is the same as the starting point for that axis. There are two ways to specify the center of the circular motion; the first uses `I` or `K` to specify the distance from the starting point to the center of the arc; the second uses `R` to specify the radius of the arc.

For information on `G17` and `G19` Plane Milling, see the Live Tooling section.

F7.8: G02 Axis Definitions: [1] Turret Lathes, [2] Table Lathes.

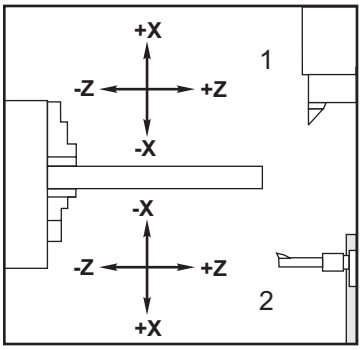

F7.9: G02 and G03 Programs

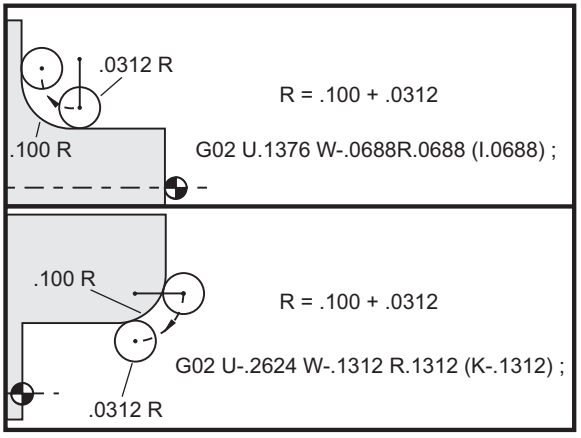

G02

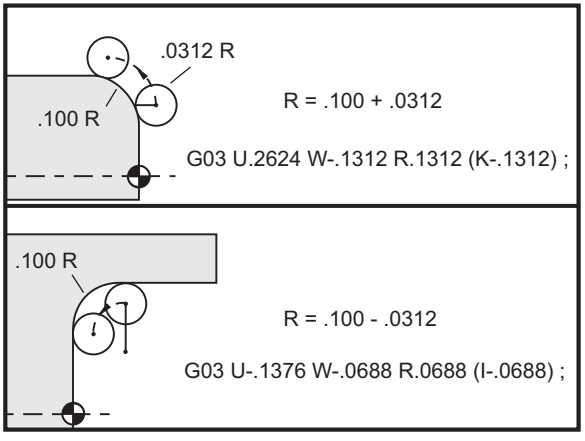

G03

R is used to specify the radius of the arc. With a positive R, the control will generate a path of 180 degrees or less; to generate a radius of over 180 degrees, specify a negative R. X or Z is required to specify an endpoint if different from the starting point.

The following lines cut an arc of less than 180 degrees:

```
G01 X3.0 Z4.0 ;
G02 Z-3.0 R5.0 ;
```

F7.10: G02 Arc Using Radius

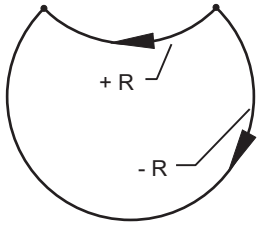

I and K are used to specify the center of the arc. When I and K are used, R may not be used. The I or K is the signed distance from the starting point to the center of the circle. If only one of I or K is specified, the other is assumed to be zero.

F7.11: G02 Defined X and Z: [1] Start.

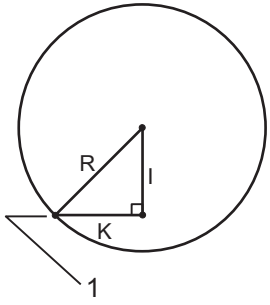

G04 Dwell (Group 00)

P - The dwell time in seconds or milliseconds

NOTE: *The P values are modal. This means if you are in the middle of a canned cycle and a G04 Pnn or an M97 Pnn is used the P value will be used for the dwell / subprogram as well as the canned cycle.*

G04 specifies a delay or dwell in the program. The block with G04 delay for the time specified by the P address code. For example:

```
G04 P10.0. ;
```

Delays the program for 10 seconds.

NOTE: *G04 P10. is a dwell of 10 seconds; G04 P10 is a dwell of 10 milliseconds. Make sure you use decimal points correctly so that you specify the correct dwell time.*

G09 Exact Stop (Group 00)

G09 code is used to specify a controlled axes stop. It affects only the block in which it is commanded. It is non-modal and does not affect the blocks that come after the block where it is commanded. Machine moves decelerate to the programmed point before the control processes the next command.

G10 Set Offsets (Group 00)

G10 lets you set offsets within the program. G10 replaces manual offset entry (i.e. Tool length and diameter, and work coordinate offsets).

L - Selects offset category.

- L2 Work coordinate origin for COMMON and G54-G59
- L10 Geometry or shift offset
- L1 or L11 Tool wear
- L20 Auxiliary work coordinate origin for G110-G129

P - Selects a specific offset.

- P1-P50 - References geometry, wear or work offsets (L10-L11)
- P0 - References COMMON work coordinate offset (L2)
- P1-P6 - G54-G59 references work coordinates (L2)
- P1-P20 G110-G129 references auxiliary coordinates (L20)
- P1-P99 G154 P1-P99 reference auxiliary coordinate (L20)

Q - Imaginary tool nose tip direction
R - Tool nose radius
***U** - Incremental amount to be added to X-axis offset
***W** - Incremental amount to be added to Z-axis offset
***X** - X-axis offset
***Z** - Z-axis offset

* indicates optional

G14 Secondary Spindle Swap / G15 Cancel (Group 17)

G14 causes the secondary spindle to become the primary spindle, so that the secondary spindle reacts to commands normally used for the main spindle. For example, M03, M04, M05 and M19 affect the secondary spindle, and M143, M144, M145, and M119 (secondary spindle commands) cause an alarm.

NOTE: *G50 limits the secondary spindle speed, and G96 sets the secondary spindle surface feed value. These G-codes adjust the secondary spindle speed when there is motion in the X Axis. G01 Feed Per Rev feeds based on the secondary spindle.*

G14 automatically activates Z-Axis mirroring. If the Z Axis is already mirrored (Setting 47 or G101), the mirror function is canceled.

G14 is canceled by G15, M30, at the end of a program, or when you press **[RESET]**.

G17 XY Plane / G18 XZ Plane / G19 YZ Plane (Group 02)

This code defines the plane in which tool path motion is performed. Programming tool nose radius compensation G41 or G42 applies Tool Radius cutter compensation in the G17 plane, regardless of whether G112 is active or not. For more information, refer to Cutter Compensation in the Programming section. Plane selection codes are modal and remain in effect until another plane is selected.

F7.12: G17, G18, and G19 Plane Selection

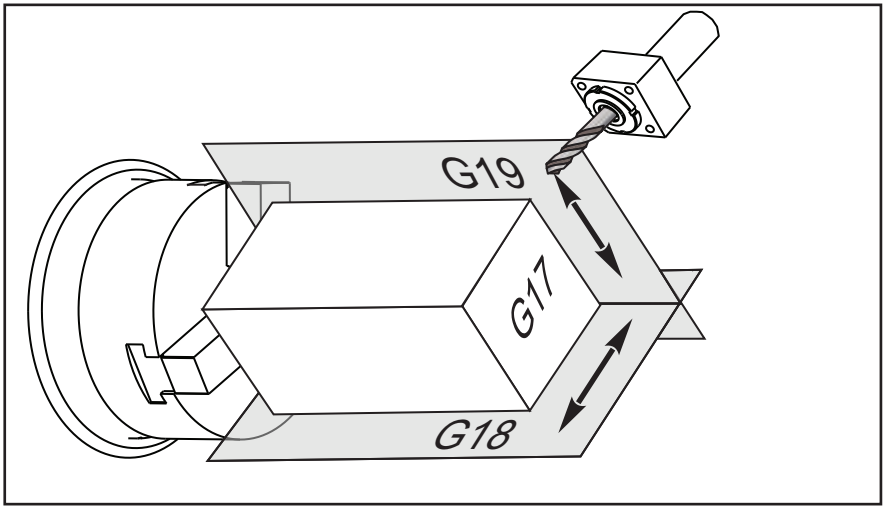

Program format with tool nose compensation:

```
G17 G01 X_ Y_ F_ ;
G40 G01 X_ Y_ I_ J_ F_ ;
```

G20 Select Inches / G21 Select Metric (Group 06)

Use G20 (inch) and G21 (mm) codes are to make sure that the inch/metric selection is set correctly for the program. Use Setting 9 to select between inch and metric programming. G20 in a program causes an alarm if Setting 9 is not set to inch.

G28 Return to Machine Zero Point (Group 00)

The G28 code returns all axes (X, Y, Z, B and C) simultaneously to the machine zero position when no axis is specified on the G28 line.

Alternatively, when one or more axes locations are specified on the G28 line, G28 will move to the specified locations and then to machine zero. This is called the G29 reference point; it is saved automatically for optional use in G29.

```
G28 X0 Z0 (moves to X0 Z0 in the current work coordinate system
then to machine zero) ;
G28 X1. Z1. (moves to X1. Z1. in the current work coordinate
system then to machine zero) ;
G28 U0 W0 (moves directly to machine zero because the initial
incremental move is zero) ;
G28 U-1. W-1 (moves incrementally -1. in each axis then to
machine zero) ;
```

G29 Return From Reference Point (Group 00)

G29 moves the axes to a specific position. The axes selected in this block are moved to the G29 reference point saved in G28, and then moved to the location specified in the G29 command.

G31 Feed Until Skip (Group 00)

(This G-code is optional and requires a probe.)

This G-code is used to record a probed location to a macro variable.

NOTE: *Turn on the probe before using* `G31`*.*

F - Feedrate in inches (mm) per minute
***U** - X-axis incremental motion command
***V** - Y-axis incremental motion command
***W** - Z-axis incremental motion command
X - X-axis absolute motion command
Y - Y-axis absolute motion command
Z - Z-axis absolute motion command
C - C-Axis absolute motion command

* indicates optional

This G-code moves the programmed axes while looking for a signal from the probe (skip signal). The specified move is started and continues until the position is reached or the probe receives a skip signal. If the probe receives a skip signal during the `G31` move, the control beeps and the skip signal position is recorded to macro variables. The program then executes the next line of code. If the probe does not receive a skip signal during the `G31` move, the control does not beep, the skip signal position is recorded at the end of the programmed move, and the program continues.

Macro variables `#5061` through `#5066` are designated to store skip signal positions for each axis. For more information about these skip signal variables see Macros in the Programming section of this manual.

Do not use Cutter Compensation (`G41` or `G42`) with a `G31`.

G32 Thread Cutting (Group 01)

F - Feedrate in inches (mm) per minute
Q - Thread Start Angle (optional). See example on the following page.
U/W - X/Z-axis incremental positioning command. (Incremental thread depth values are user specified)
X/Z - X/Z-axis absolute positioning command. (Thread depth values are user specified)

NOTE: *Feedrate is equivalent to thread lead. Movement on at least one axis must be specified. Tapered threads have lead in both X and Z. In this case set the feedrate to the larger of the two leads.* `G99` *(Feed per Revolution) must be active.*

F7.13: G32 Definition of Lead (Feedrate): [1] Straight thread, [2] Tapered thread.

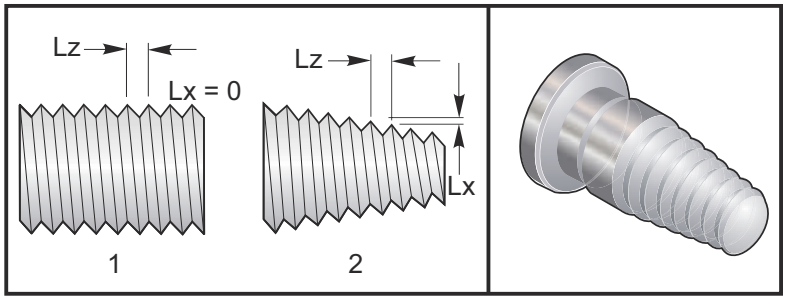

G32 differs from other thread cutting cycles in that taper and/or lead can vary continuously throughout the entire thread. In addition, no automatic position return is performed at the end of the threading operation.

At the first line of a G32 block of code, axis feed is synchronized with the rotation signal of the spindle encoder. This synchronization remains in effect for each line in a G32 sequence. It is possible to cancel G32 and recall it without losing the original synchronization. This means multiple passes will exactly follow the previous tool path. (The actual spindle RPM must be exactly the same between passes).

NOTE: *Single Block Stop and Feed Hold are deferred until last line of a G32 sequence. Feedrate Override is ignored while G32 is active, Actual Feedrate will always be 100% of programmed feedrate. M23 and M24 have no affect on a G32 operation, the user must program chamfering if needed. G32 must not be used with any G-code Canned Cycles (i.e.: G71). Do Not change spindle RPM during threading.*

CAUTION: *G32 is Modal. Always cancel G32 with another Group 01 G-code at the end of a threading operation. (Group 01 G-codes: G00, G01, G02, G03, G32, G90, G92, and G94.*

F7.14: Straight-to-Taper-to-Straight Thread Cutting Cycle

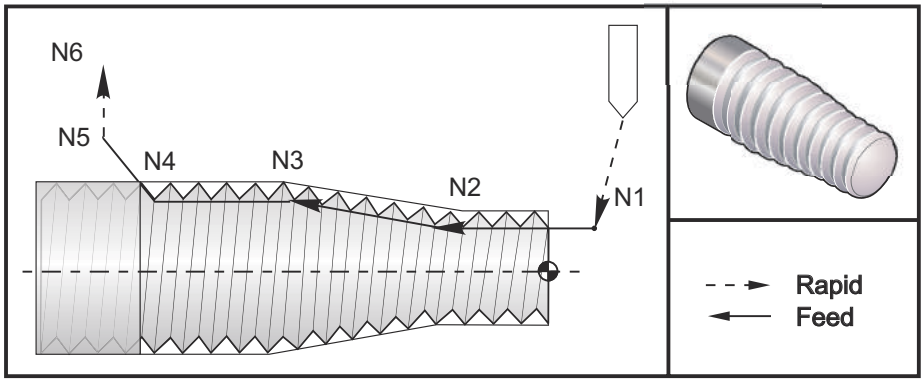

NOTE: *Example is for reference only. Multiple passes are usually required to cut actual threads.*

```
%
o60321 (G32 THREAD CUTTING WITH TAPER) ;
(G54 X0 is at the center of rotation) ;
(Z0 is on the face of the part) ;
(T1 is an OD thread tool) ;
(BEGIN PREPARATION BLOCKS) ;
T101 (Select tool and offset 1) ;
G00 G18 G20 G40 G80 G99 (Safe startup) ;
G50 S1000 (Limit spindle to 1000 RPM) ;
G97 S500 M03 (CSS off, Spindle on CW) ;
N1 G00 G54 X0.25 Z0.1 (Rapid to 1st position) ;
M08 (coolant on) ;
(BEGIN CUTTING BLOCKS) ;
N2 G32 Z-0.26 F0.065 (Straight thread, Lead = .065) ;
N3 X0.455 Z-0.585 (Blend to tapered thread) ;
N4 Z-0.9425 (Blend back to straight thread) ;
N5 X0.655 Z-1.0425 (Pull off at 45 degrees) ;
(BEGIN COMPLETION BLOCKS) ;
N6 G00 X1.2 M09 (Rapid Retract, Coolant off) ;
G53 X0 (X home) ;
G53 Z0 M05 (Z home, spindle off) ;
M30 (End program) ;
%
```

G40 Tool Nose Compensation Cancel (Group 07)

***X** - X Axis absolute location of departure target
***Z** - Z Axis absolute location of departure target
***U** - X Axis incremental distance to departure target
***W** - Z Axis incremental distance to departure target

* indicates optional

`G40` cancels `G41` or `G42`. Programming `Txx00` will also cancel tool nose compensation. Cancel tool nose compensation before the end of a program.

The tool departure usually does not correspond with a point on the part. In many cases overcutting or undercutting can occur.

F7.15: `G40` TNC Cancel: [1] Overcut.

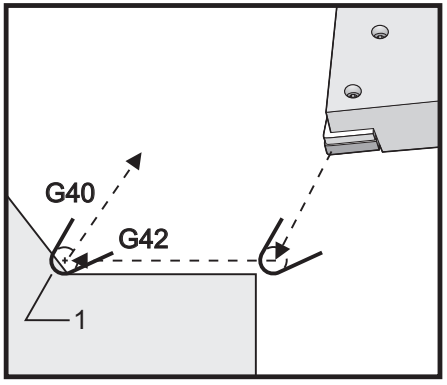

G41 Tool Nose Compensation (TNC) Left / G42 TNC Right (Group 07)

G41 or G42 will select tool nose compensation. G41 moves the tool to the left of the programmed path to compensate for the size of a tool and vice versa for G42. A tool offset must be selected with a Tnnxx code. where xx corresponds to the offsets that are to be used with the tool. For more information, see Tool Nose Compensation in the Operation section of this manual.

F7.16: G41 TNC Right and G42 TNC Left: [1] Tip = 2, [2] Tip = 3.

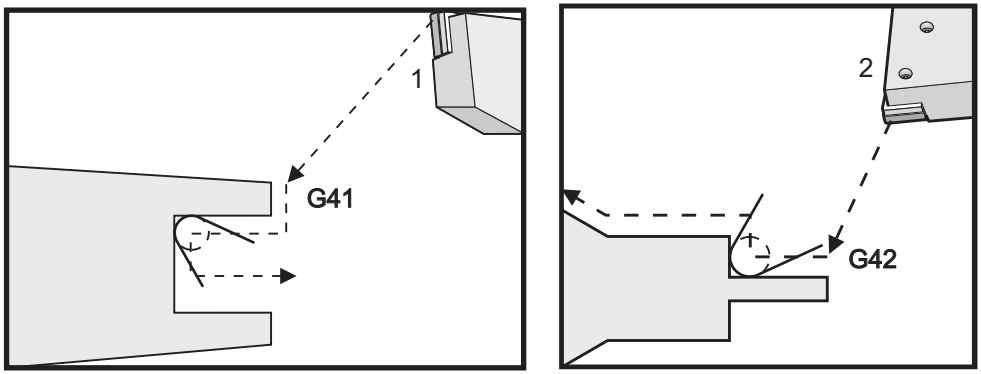

G41 G42

G50 Spindle Speed Limit

G50 can be used to limit the maximum spindle speed. The control will not allow the spindle to exceed the S address value specified in the G50 command. This is used in constant surface feed mode (G96).

This G code will also limit the secondary spindle on DS-Series machines.

```
N1G50 S3000 (Spindle rpm will not exceed 3000 rpm) ;
N2G97 M3 (Enter constant surface speed cancel, spindle on) ;
```

NOTE: *To cancel this command, use another G50 and specify the maximum spindle RPM for the machine.*

G50 Set Global Coordinate Offset FANUC (Group 00)

U - Incremental amount and direction to shift global X coordinate.
X - Absolute global coordinate shift.
W - Incremental amount and direction to shift global Z coordinate.
Z - Absolute global coordinate shift.
S - Limit spindle speed to specified value

G50 performs several functions. It sets and shifts the global coordinate and it limits the spindle speed to a maximum value. Refer to the Global Coordinate System topic in the Programming section for a discussion of these.

To set the global coordinate, command G50 with an X or Z value. The effective coordinate becomes the value specified in address code X or Z. Current machine location, work offsets, and tool offsets are taken into account. The global coordinate is calculated and set. For example:

```
G50 X0 Z0 (Effective coordinates are now zero) ;
```

To shift the global coordinate system, specify G50 with a U or W value. The global coordinate system is shifted by the amount and direction specified in U or W. The current effective coordinate displayed changes by this amount in the opposite direction. This method is often used to place the part zero outside of the work cell. For example:

```
G50 W-1.0 (Effective coordinates are shifted left 1.0) ;
```

G52 Set Local Coordinate System FANUC (Group 00)

This code selects the user coordinate system.

G53 Machine Coordinate Selection (Group 00)

This code temporarily cancels work coordinates offsets and uses the machine coordinate system. This code will also ignore tool offsets.

G54-G59 Coordinate System #1 - #6 FANUC (Group 12)

G54 - G59 codes are user-settable coordinate systems, #1 - #6, for work offsets. All subsequent references to axes' positions are interpreted in the new coordinate system. Work coordinate system offsets are entered from the **Active Work Offset** display page. For additional offsets, refer to G154 on page **362**.

G61 Exact Stop Mode (Group 15)

The G61 code is used to specify exact stop. Rapid and interpolated moves will decelerate to an exact stop before another block is processed. In exact stop, moves will take a longer time and continuous cutter motion will not occur. This may cause deeper cutting where the tool stops.

G64 Cancels Exact Stop Mode (Group 15)

G64 code cancels exact stop and selects the normal cutting mode.

G65 Macro Subprogram Call Option (Group 00)

G65 is described in the Macros programming section.

G70 Finishing Cycle (Group 00)

The G70 Finishing Cycle can be used to finish cut paths that are rough cut with stock removal cycles such as G71, G72 and G73.

P - Starting Block number of routine to execute
Q - Ending Block number of routine to execute

G18 Z-X plane must be active

NOTE: *The P values are modal. This means if you are in the middle of a canned cycle and a G04 Pnn or an M97 Pnn is used the P value will be used for the dwell / subprogram as well as the canned cycle.*

F7.17: G70 Finishing Cycle: [P] Starting block, [Q] Ending Block.

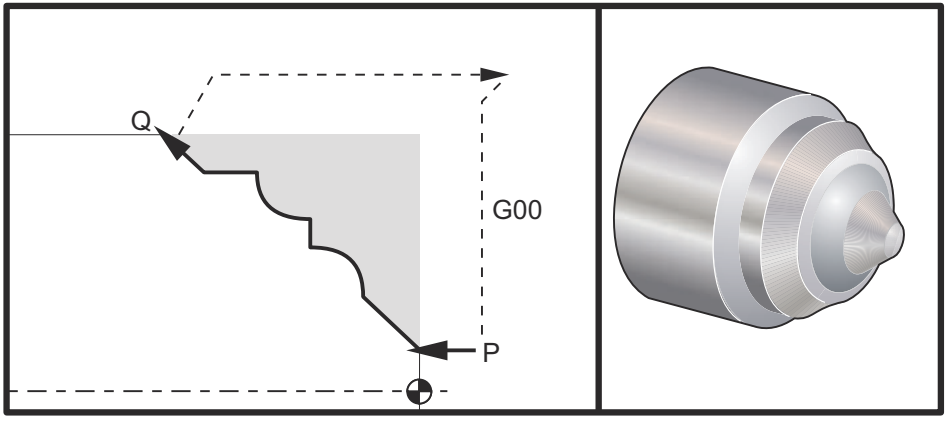

%

```
G71 P10 Q50 F.012 (rough out N10 to N50 the path) ;
N10 ;
F0.014 ;
... ;
N50 ;
... ;
G70 P10 Q50 (finish path defined by N10 to N50) ;
%
```

The G70 cycle is similar to a local subprogram call. However, the G70 requires that a beginning block number (P code) and an ending block number (Q code) be specified.

The G70 cycle is usually used after a G71, G72 or G73 has been performed using the blocks specified by P and Q. Any F, S, or T codes with the PQ block are effective. After execution of the Q block, a rapid (G00) is executed returning the machine to the start position that was saved before the starting of the G70. The program then returns to the block following the G70 call. A subprogram in the PQ sequence is acceptable providing that the subprogram does not contain a block with an N code matching the Q specified by the G70 call. This feature is not compatible with FANUC controls.

After a G70, the block following the G70 will be executed, not the block with an N code matching the Q code specified by the G70 call.

G71 O.D./I.D. Stock Removal Cycle (Group 00)

First Block (Only use when using two block G71 notation)
***U** - Depth of cut for each pass of stock removal, positive radius
***R** - Retract height for each pass of stock removal
Second Block
***D** - Depth of cut for each pass of stock removal, positive radius (Only use when using one block G71 notation)
***F** - Feedrate in inches (mm) per minute (G98) or per revolution (G99) to use throughout G71 PQ block
***I** - X-axis size and direction of G71 rough pass allowance, radius
***K** - Z-axis size and direction of G71 rough pass allowance
P - Starting Block number of path to rough
Q - Ending Block number of path to rough
***S** - Spindle speed to use throughout G71 PQ block
***T** - Tool and offset to use throughout G71 PQ block
***U** - X-axis size and direction of G71 finish allowance, diameter
***W** - Z-axis size and direction of G71 finish allowance

* indicates optional

G18 Z-X plane must be active.

2 Block G71 Programming Example:

```
G71 U... R...
G71 F... I... K... P... Q... S... T... U... W...
```

NOTE: *The P values are modal. This means if you are in the middle of a canned cycle and a `G04 Pnn` or an `M97 Pnn` is used the P value will be used for the dwell / subprogram as well as the canned cycle.*

F7.18: `G71` Stock Removal: [1] Setting 287, [2] Start position, [3] Z-Axis clearance plane, [4] Finishing allowance, [5] Roughing allowance, [6] Programmed path.

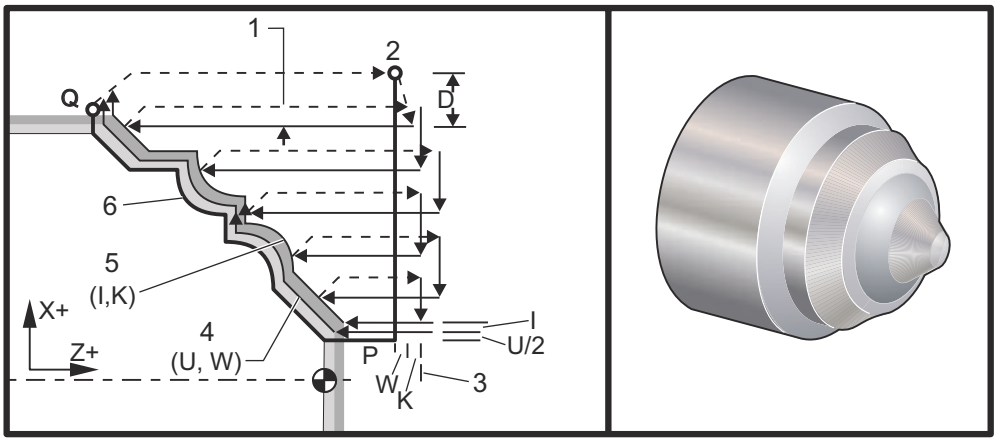

This canned cycle roughs material on a part given the finished part shape. Define the shape of a part by programming the finished tool path and then use the `G71 PQ` block. Any `F`,`S` or `T` commands on the `G71` line or in effect at the time of the `G71` is used throughout the `G71` roughing cycle. Usually a `G70` call to the same `PQ` block definition is used to finish the shape.

Two types of machining paths are addressed with a `G71` command. The first type of path (Type 1) is when the X-Axis of the programmed path does not change direction. The second type of path (Type 2) allows the X-Axis to change direction. For both Type 1 and Type 2, the programmed path of the Z-axis cannot change direction. If the `P` block contains only an X-Axis position, then Type 1 roughing is assumed. If the `P` block contains both an X-Axis and Z-Axis position, then Type 2 roughing is assumed.

NOTE: *The Z-Axis position given in the `P` block to specify Type 2 roughing does not have to cause axis motion. You can use the current Z-Axis position. For example, In the program example on page **11**, note that the `P1` block (indicated by the comment in parentheses) contains the same Z-Axis position as the start position `G00` block above.*

Any one of the four quadrants of the X-Z plane can be cut by specifying address codes D, I, K, U, and W properly.

In the figures, the start position S is the position of the tool at the time of the G71 call. The Z clearance plane [3] is derived from the Z-axis start position and the sum of W and optional K finish allowance.

F7.19: G71 Address Relationships

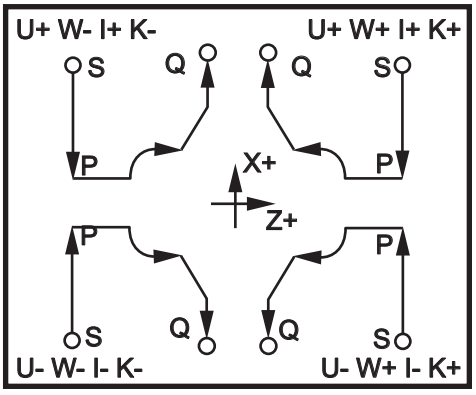

Type I Details

When Type I is specified by the programmer it is assumed that the X-axis tool path does not reverse during a cut. Each roughing pass X-axis location is determined by applying the value specified in D to the current X location. The nature of the movement along the Z clearance plane for each roughing pass is determined by the G code in block P. If block P contains a G00 code, then movement along the Z clearance plane is a rapid mode. If block P contains a G01 then movement will be at the G71 feed rate.

Each roughing pass is stopped before it intersects the programmed tool path allowing for both roughing and finishing allowances. The tool is then retracted from the material, at a 45 degree angle. The tool then moves in rapid mode to the Z-axis clearance plane.

When roughing is completed the tool is moved along the tool path to clean up the rough cut. If I and K are specified an additional rough finish cut parallel to the tool path is performed.

Type II Details

When Type II is specified by the programmer the X axis PQ path is allowed to vary (for example, the X-axis tool path can reverse direction).

The X axis PQ path must not exceed the original starting location. The only exception is the ending Q block.

Type II, must have a reference move, in both the X and Z axis, in the block specified by P.

Roughing is similar to Type I except after each pass along the Z axis, the tool will follow the path defined by PQ. The tool will then retract parallel to the X axis. The Type II roughing method does not leave steps in the part prior to finish cutting and typically results in a better finish.

G72 End Face Stock Removal Cycle (Group 00)

First Block (Only use when using two block G72 notation)
***W** - Depth of cut for each pass of stock removal, positive radius
***R** - Retract height for each pass of stock removal
Second Block
***D** - Depth of cut for each pass of stock removal, positive radius (Only use when using one block G72 notation)
***F** - Feedrate in inches (mm) per minute (G98) or per revolution (G99) to use throughout G71 PQ block
***I** - X-axis size and direction of G72 rough pass allowance, radius
***K** - Z-axis size and direction of G72 rough pass allowance
P - Starting Block number of path to rough
Q - Ending Block number of path to rough
***S** - Spindle speed to use throughout G72 PQ block
***T** - Tool and offset to use throughout G72 PQ block
***U** - X-axis size and direction of G72 finish allowance, diameter
***W** - Z-axis size and direction of G72 finish allowance

*indicates optional

G18 Z-X plane must be active.

2 Block G72 Programming Example:

```
G72 W... R...
G72 F... I... K... P... Q... S... T... U... W...
```

NOTE: *The P values are modal. This means if you are in the middle of a canned cycle and a G04 Pnn or an M97 Pnn is used the P value will be used for the dwell / subprogram as well as the canned cycle.*

F7.20: G72 Basic G Code Example: [P] Starting block, [1] Start position, [Q] Ending block.

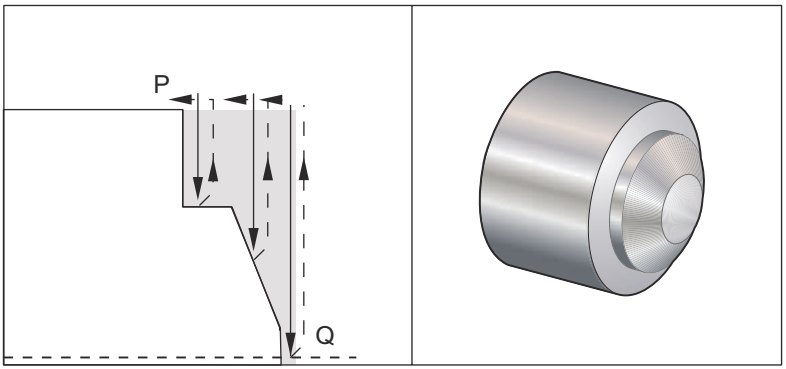


```
%
O60721 (G72 END FACE STOCK REMOVAL EX 1) ;
(G54 X0 is at the center of rotation) ;
(Z0 is on the face of the part) ;
(T1 is an end face cutting tool) ;
(BEGIN PREPARATION BLOCKS) ;
T101 (Select tool and offset 1) ;
G00 G18 G20 G40 G80 G99 (Safe startup) ;
G50 S1000 (Limit spindle to 1000 RPM) ;
G97 S500 M03 (CSS, spindle on CW) ;
G00 G54 X6. Z0.1 (Rapid to clear position) ;
M08 (Coolant on) ;
G96 S200 (CSS on) ;
(BEGIN CUTTING BLOCKS) ;
G72 P1 Q2 D0.075 U0.01 W0.005 F0.012 (Begin G72) ;
N1 G00 Z-0.65 (P1 - Begin toolpath);
G01 X3. F0.006 (1st position);
Z-0.3633 (Face Stock Removal);
X1.7544 Z0. (Face Stock Removal) ;
X-0.0624 ;
N2 G00 Z0.02 (Q2 - End toolpath);
G70 P1 Q2 (Finish Pass) ;
(BEGIN COMPLETION BLOCKS) ;
G97 S500 (CSS off) ;
G00 G53 X0 M09 (X home, coolant off) ;
G53 Z0 M05 (Z home, spindle off) ;
M30 (End program) ;
%
```

F7.21: G72 Tool Path: [P] Starting block, [1] Start position, [Q] Ending block.

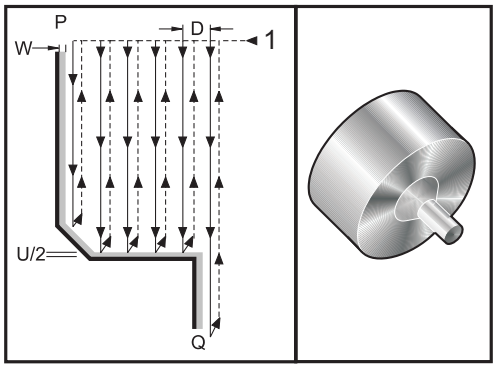


```
%
O60722(G72 END FACE STOCK REMOVAL EX 2) ;
(G54 X0 is at the center of rotation) ;
(Z0 is on the face of the part) ;
(T1 is an end face cutting tool) ;
(BEGIN PREPARATION BLOCKS) ;
T101 (Select tool and offset 1) ;
G00 G18 G20 G40 G80 G99 (Safe startup) ;
G50 S1000 (Limit spindle to 1000 RPM) ;
G97 S500 M03 (CSS, spindle on CW) ;
G00 G54 X4.05 Z0.2 (Rapid to 1st position) ;
M08 (Coolant on) ;
G96 S200 (CSS on) ;
(BEGIN CUTTING BLOCKS) ;
G72 P1 Q2 U0.03 W0.03 D0.2 F0.01 (Begin G72);
N1 G00 Z-1.(P1 - Begin toolpath) ;
G01 X1.5 (Linear feed) ;
X1. Z-0.75 (Linear feed) ;
G01 Z0 (Linear feed) ;
N2 X0(Q2 - End of toolpath) ;
G70 P1 Q2 (Finishing cycle) ;
(BEGIN COMPLETION BLOCKS) ;
G97 S500 (CSS off) ;
G00 G53 X0 M09 (X home, coolant off) ;
G53 Z0 M05 (Z home, spindle off) ;
M30 (End program) ;
%
```

This canned cycle removes material on a part given the finished part shape. It is similar to G71 but removes material along the face of a part. Define the shape of a part by programming the finished tool path and then use the G72 PQ block. Any F,S or T commands on the G72 line or in effect at the time of the G72 is used throughout the G72 roughing cycle. Usually a G70 call to the same PQ block definition is used to finish the shape.

Two types of machining paths are addressed with a G72 command.

- The first type of path (Type 1) is when the Z Axis of the programmed path does not change direction. The second type of path (Type 2) allows the Z Axis to change direction. For both the first type and the second type of programmed path the X Axis cannot change direction. If Setting 33 is set to FANUC, Type 1 is selected by having only an X-axis motion in the block specified by P in the G72 call.
- When both an X-axis and Z-axis motion are in the P block then Type 2 roughing is assumed.

F7.22: G72 End Face Stock Removal Cycle: [P] Starting block, [1] X-Axis clearance plane, [2] G00 block in P, [3] Programmed path, [4] Roughing allowance, [5] Finishing allowance.

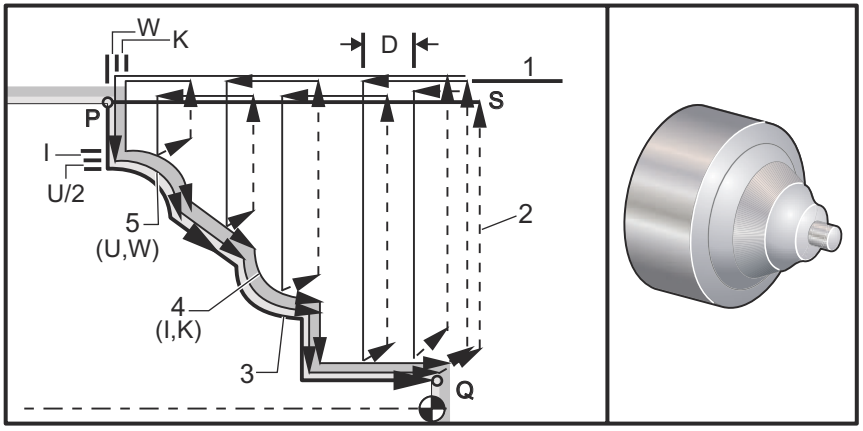

The G72 consists of a roughing phase and a finishing phase. The roughing and finishing phase are handled differently for Type 1 and Type 2. Generally the roughing phase consists of repeated passes along the X-axis at the specified feed rate. The finishing phase consists of a pass along the programmed tool path to remove excess material left by the roughing phase while leaving material for a G70 finishing cycle. The final motion in either type is a return to the starting position S.

In the previous figure the start position S is the position of the tool at the time of the G72 call. The X clearance plane is derived from the X-axis start position and the sum of U and optional I finish allowances.

Any one of the four quadrants of the X-Z plane can be cut by specifying address codes I, K, U, and W properly. The following figure indicates the proper signs for these address codes to obtain the desired performance in the associated quadrants.

F7.23: G72 Address Relationships

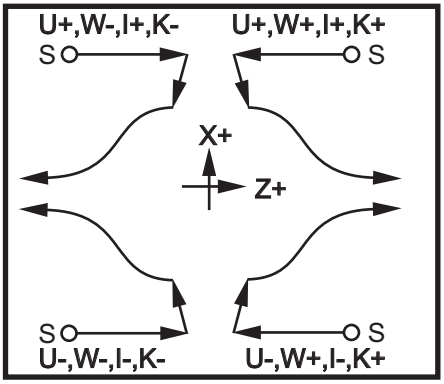

G73 Irregular Path Stock Removal Cycle (Group 00)

D - Number of cutting passes, positive integer
"**F** - Feedrate in inches (mm) per minute (G98) or per revolution (G99) to use throughout G73 PQ block
I - X-axis distance and direction from first cut to last, radius
K - Z-axis distance and direction from first cut to last
P - Starting Block number of path to rough
Q - Ending Block number of path to rough
***S** - Spindle speed to use throughout G73 PQ block
***T** - Tool and offset to use throughout G73 PQ block
***U** - X-axis size and direction of G73 finish allowance, diameter
***W** - Z-axis size and direction of G73 finish allowance

* indicates optional

G18 Z-X plane must be active

NOTE: *The P values are modal. This means if you are in the middle of a canned cycle and a G04 Pnn or an M97 Pnn is used the P value will be used for the dwell / subprogram as well as the canned cycle.*

F7.24: G73 Irregular Path Stock Removal: [P] Starting block, [Q] Ending block [1] Start position, [2] Programmed path, [3] Finish allowance, [4] Roughing allowance.

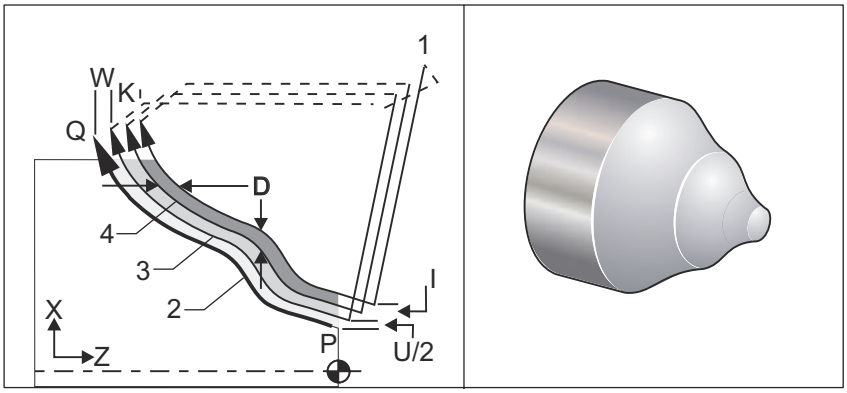

The G73 canned cycle can be used for rough cutting of preformed material such as castings. The canned cycle assumes that material has been relieved or is missing a certain known distance from the programmed tool path PQ.

Machining starts from the current position (S), and either rapids or feeds to the first rough cut. The nature of the approach move is based on whether a G00 or G01 is programmed in block P. Machining continues parallel to the programmed tool path. When block Q is reached a rapid departure move is executed to the Start position plus the offset for the second roughing pass. Roughing passes continue in this manner for the number of rough passes specified in D. After the last rough is completed, the tool returns to the starting position S.

Only F, S and T prior to or in the G73 block are in effect. Any feed (F), spindle speed (S) or tool change (T) codes on the lines from P to Q are ignored.

The offset of the first rough cut is determined by (U/2 + I) for the X Axis, and by (W + K) for the Z Axis. Each successive roughing pass moves incrementally closer to the final roughing finish pass by an amount of (I/(D- 1)) in the X Axis, and by an amount of (K/(D-1)) in the Z Axis. The last rough cut always leaves finish material allowance specified by U/2 for the X Axis and W for the Z Axis. This canned cycle is intended for use with the G70 finishing canned cycle.

The programmed tool path PQ does not have to be monotonic in X or Z, but care has to be taken to insure that existing material does not interfere with tool movement during approach and departure moves.

NOTE: *Monotonic curves are curves that tend to move in only one direction as x increases. A monotonic increasing curve always increases as x increases, i.e. f(a)>f(b) for all a>b. A monotonic decreasing curve always decreases as x increases, i.e. f(a)<f(b) for all a>b. The same sort of restrictions are also made for the monotonic non-decreasing and monotonic non-increasing curves.*

The value of `D` must be a positive integral number. If the `D` value includes a decimal, an alarm is generated. The four quadrants of the `ZX` plane can be machined if the following signs for `U`, `I`, `W`, and `K` are used.

F7.25: `G71` Address Relationships

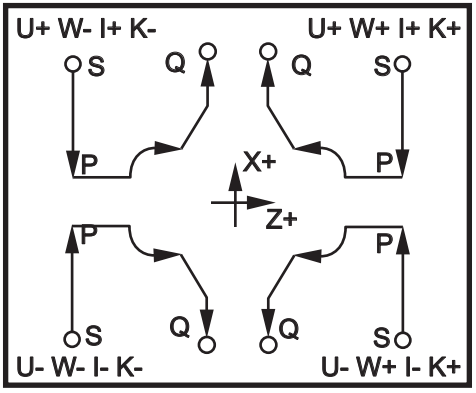

G74 End Face Grooving Cycle (Group 00)

* **D** - Tool clearance when returning to starting plane, positive radius
* **F** - Feed rate
* **I** - X-axis size of increment between peck cycles, positive radius
K - Z-axis size of increment between pecks in a cycle
* **U** - X-axis incremental distance away from current X position before returning to the start plane.
W - Z-axis incremental distance to total pecking depth
X - X-axis absolute location of furthest peck cycle (diameter)
Z - Z-axis absolute location total pecking depth

*indicates optional

F7.26: G74 End Face Grooving Cycle Peck Drilling: [1] Rapid, [2] Feed, [3] Programmed Path, [S] Start position, [P] Peck retraction (Setting 22).

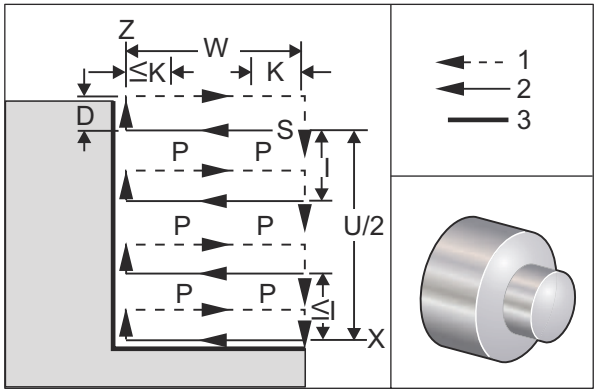

The G74 canned cycle is used for grooving on the face of a part, peck drilling, or turning.

***Warning: The D code command is rarely used and should only be used if the wall on the outside of the groove does not exist like the figure above. The D code can be used in grooving and turning to provide a tool clearance shift, in the X axis, before returning in the Z axis to the “C” clearance point. But, if both sides to the groove exist during the shift, then the groove tool would break. So you wouldn’t want to use the D command.

A minimum of two pecking cycles occur, if an X, or U, code is added to a G74 block and X is not the current position. One at the current location and then at the X location. The I code is the incremental distance between X-Axis pecking cycles. Adding an I performs multiple pecking cycles between the starting position S and X. If the distance between S and X is not evenly divisible by I then the last interval is less than I.

When K is added to a G74 block, pecking is performed at each interval specified by K, the peck is a rapid move opposite the direction of feed with a distance defined by Setting 22. The D code can be used for grooving and turning to provide material clearance when returning to starting plane S.

F7.27: G74 End Face Grooving Cycle: [1] Rapid, [2] Feed, [3] Groove.

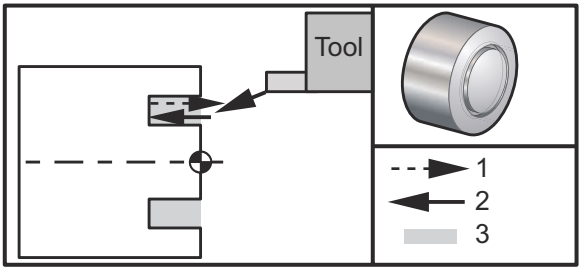


```
%
O60741 (G74 END FACE) ;
(G54 X0 is at the center of rotation) ;
```

```
(Z0 is on the face of the part) ;
(T1 is an end face cutting tool) ;
(BEGIN PREPARATION BLOCKS) ;
T101 (Select tool and offset 1) ;
G00 G18 G20 G40 G80 G99 (Safe startup) ;
G50 S1000 (Limit spindle to 1000 RPM) ;
G97 S500 M03 (CSS off, Spindle on CW) ;
G00 G54 X3. Z0.1 (Rapid to 1st position) ;
M08 (Coolant on) ;
G96 S200 (CSS on) ;
(BEGIN CUTTING BLOCKS) ;
G74 Z-0.5 K0.1 F0.01 (Begin G74) ;
(BEGIN COMPLETION BLOCKS) ;
G97 S500 (CSS off) ;
G00 G53 X0 M09 (X home, coolant off) ;
G53 Z0 M05 (Z home, spindle off) ;
M30 (End program) ;
%
```

F7.28: G74 End Face Grooving Cycle (Multiple Pass): [1] Rapid, [2] Feed, [3] Programmed path, [4] Groove.

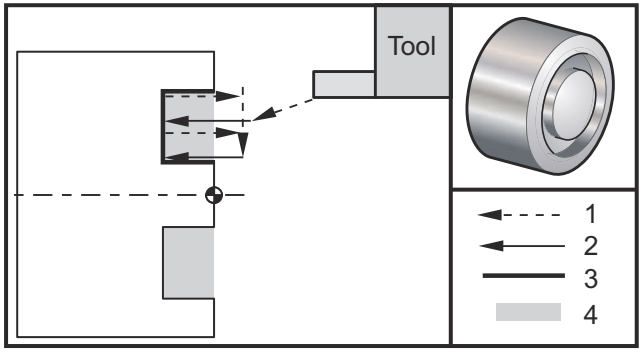


```
%
O60742 (G74 END FACE MULTI PASS) ;
(G54 X0 is at the center of rotation) ;
(Z0 is on the face of the part) ;
(T1 is an end face cutting tool) ;
(BEGIN PREPARATION BLOCKS) ;
T101 (Select tool and offset 1) ;
G00 G18 G20 G40 G80 G99 (Safe startup) ;
G50 S1000 (Limit spindle to 1000 RPM) ;
G97 S500 M03 (CSS off, spindle on CW) ;
G00 G54 X3. Z0.1 (Rapid to 1st position) ;
```

```
M08 (Coolant on) ;
G96 S200 (CSS on) ;
(BEGIN CUTTING BLOCKS) ;
G74 X1.75 Z-0.5 I0.2 K0.1 F0.01 (Begin G74) ;
(BEGIN COMPLETION BLOCKS) ;
G97 S500 (CSS off) ;
G00 G53 X0 M09 (X home, coolant off) ;
G53 Z0 M05 (Z home, spindle off) ;
M30 (End program) ;
%
```

G75 O.D./I.D. Grooving Cycle (Group 00)

***D** - Tool clearance when returning to starting plane, positive
***F** - Feed rate
***I** - X-axis size of increment between pecks in a cycle (radius measure)
***K** - Z-axis size of increment between peck cycles
***U** - X-axis incremental distance to total pecking depth
W - Z-axis incremental distance to furthest peck cycle
X - X-axis absolute location total pecking depth (diameter)
Z - Z-axis absolute location to furthest peck cycle

* indicates optional

F7.29: G75 O.D./I.D. Grooving Cycle: [1] Rapid, [2] Feed, [S] Start position.

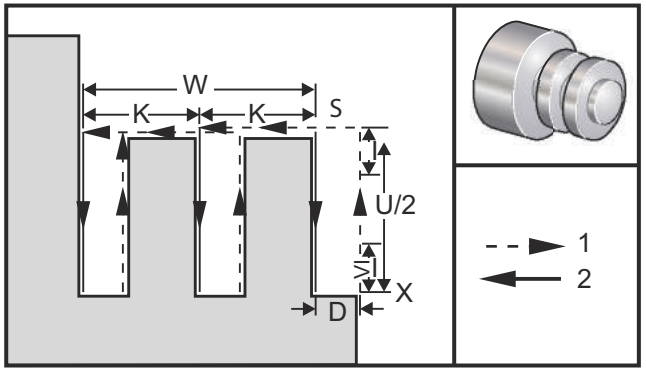

The G75 canned cycle can be used for grooving an outside diameter. When a Z, or W, code is added to a G75 block and Z is not the current position, then a minimum of two pecking cycles occur. One at the current location and another at the Z location. The K code is the incremental distance between Z axis pecking cycles. Adding a K performs multiple, evenly spaced, grooves. If the distance between the starting position and the total depth (Z) is not evenly divisible by K then the last interval along Z is less than K.

NOTE: *Chip clearance is defined by Setting 22.*

F7.30: G75 O.D. Single Pass

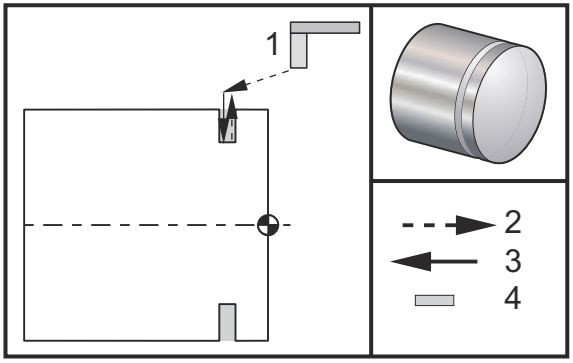


```
%
O60751 (G75 OD GROOVE CYCLE) ;
(G54 X0 is at the center of rotation) ;
(Z0 is on the face of the part) ;
(T1 is an OD groove tool) ;
(BEGIN PREPARATION BLOCKS) ;
T101 (Select tool and offset 1) ;
G00 G18 G20 G40 G80 G99 (Safe startup) ;
G50 S1000 (Limit spindle to 1000 RPM) ;
G97 S500 M03 (CSS off, spindle on CW) ;
G00 G54 X4.1 Z0.1 (Rapid to 1st position) ;
M08 (Coolant on) ;
G96 S200 (CSS on) ;
(BEGIN CUTTING BLOCKS) ;
G01 Z-0.75 F0.05 (Feed to Groove location) ;
G75 X3.25 I0.1 F0.01 (Begin G75) ;
(BEGIN COMPLETION BLOCKS) ;
G97 S500 (CSS off) ;
G00 G53 X0 M09 (X home, coolant off) ;
G53 Z0 M05 (Z home, spindle off) ;
M30 (End program) ;
%
```

The following program is an example of a G75 program (Multiple Pass):

F7.31: G75 O.D. Multiple Pass: [1] Tool, [2] Rapid, [3] Feed, [4] Groove.

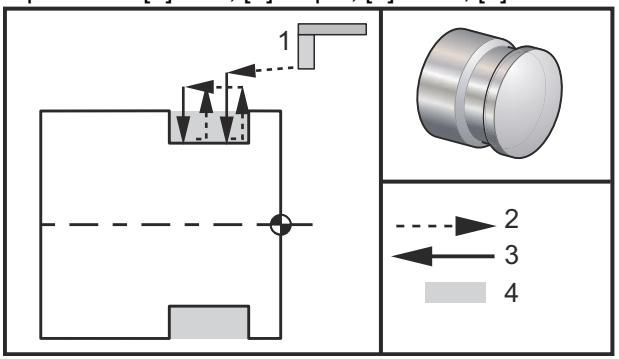


```
%
O60752 (G75 OD GROOVE CYCLE 2) ;
(G54 X0 is at the center of rotation) ;
(Z0 is on the face of the part) ;
(T1 is an OD groove tool) ;
(BEGIN PREPARATION BLOCKS) ;
T101 (Select tool and offset 1) ;
G00 G18 G20 G40 G80 G99 (Safe startup) ;
G50 S1000 (Limit spindle to 1000 RPM) ;
G97 S500 M03 (CSS off, spindle on CW) ;
G00 G54 X4.1 Z0.1 (Rapid to 1st position) ;
M08 (Coolant on) ;
G96 S200 (CSS on) ;
(BEGIN CUTTING BLOCKS) ;
G01 Z-0.75 F0.05 (Feed to Groove location) ;
G75 X3.25 Z-1.75 I0.1 K0.2 F0.01 (Begin G75) ;
(BEGIN COMPLETION BLOCKS) ;
G97 S500 (CSS off) ;
G00 G53 X0 M09 (X home, coolant off) ;
G53 Z0 M05 (Z home, spindle off) ;
M30 (End program) ;
%
```

G76 Threading Cycle, Multiple Pass (Group 00)

***A** - Tool nose angle (value: 0 to 120 degrees) Do not use a decimal point
D - First pass cutting depth
F(E) - Feed rate, the lead of the thread
***I** - Thread taper amount, radius measure
K - Thread height, defines thread depth, radius measure
***P** - Single Edge Cutting (load constant)
***Q** - Thread Start Angle (Do not use a decimal point)
***U** - X-axis incremental distance, start to maximum thread Depth Diameter
***W** - Z-axis incremental distance, start to maximum thread length
***X** - X-axis absolute location, maximum thread Depth Diameter
***Z** - Z-axis absolute location, maximum thread length

* indicates optional

NOTE: *The P values are modal. This means if you are in the middle of a canned cycle and a `G04 Pnn` or an `M97 Pnn` is used the P value will be used for the dwell / subprogram as well as the canned cycle.*

F7.32: `G76` Threading Cycle, Multiple Pass: [1] Z depth, [2] Minor diameter, [3] Major diameter.

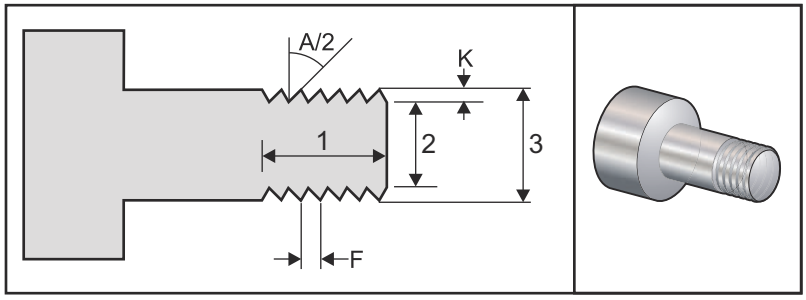

Setting 95/Setting 96 determine chamfer size/angle; `M23`/`M24` turn chamfering **ON**/**OFF**.

F7.33: G76 Threading Cycle, Multiple Pass Tapered: [1] Rapid, [2] Feed, [3] Programmed path, [4] Cut allowance, [5] Start position, [6] Finished diameter, [7] Target, [A] Angle.

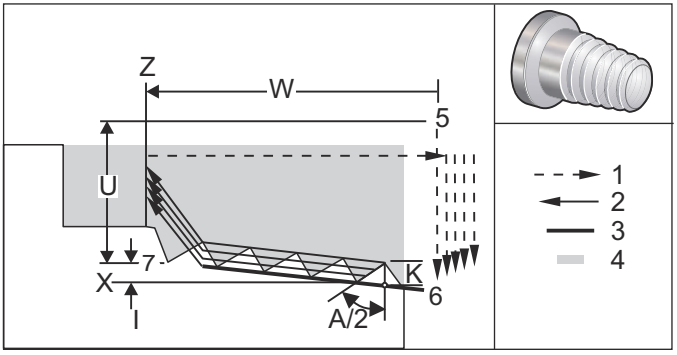

The G76 canned cycle can be used for threading both straight or tapered (pipe) threads.

The height of the thread is defined as the distance from the crest of the thread to the root of the thread. The calculated depth of thread (K) is the value of K less the finish allowance (Setting 86, Thread Finish Allowance).

The thread taper amount is specified in I. Thread taper is measured from the target position X, Z at point [7] to position [6]. The I value is the difference in radial distance from the start to the end of the thread, not an angle.

NOTE: *A conventional O.D. taper thread will have a negative I value.*

The depth of the first cut through the thread is specified in D. The depth of the last cut through the thread can be controlled with Setting 86.

The tool nose angle for the thread is specified in A. The value can range from 0 to 120 degrees. If A is not used, 0 degrees is assumed. To reduce chatter while threading use A59 when cutting a 60 degree included thread.

The F code specifies the feed rate for threading. It is always good programming practice to specify G99 (feed per revolution) prior to a threading canned cycle. The F code also indicates the thread pitch or lead.

At the end of the thread an optional chamfer is performed. The size and angle of the chamfer is controlled with Setting 95 (Thread Chamfer Size) and Setting 96 (Thread Chamfer Angle). The chamfer size is designated in number of threads, so that if 1.000 is recorded in Setting 95 and the feed rate is .05, then the chamfer will be .05. A chamfer can improve the appearance and functionality of threads that must be machined up to a shoulder. If relief is provided for at the end of the thread then the chamfer can be eliminated by specifying 0.000 for the chamfer size in Setting 95, or using M24. The default value for Setting 95 is 1.000 and the default angle for the thread (Setting 96) is 45 degrees.

F7.34: G76 Using an A Value: [1] Setting 95 and 96 (see Note), [2] Setting 99 (Thread Minimum Cut), [3] Cutting Tip, [4] Setting 86 - Finish Allowance.

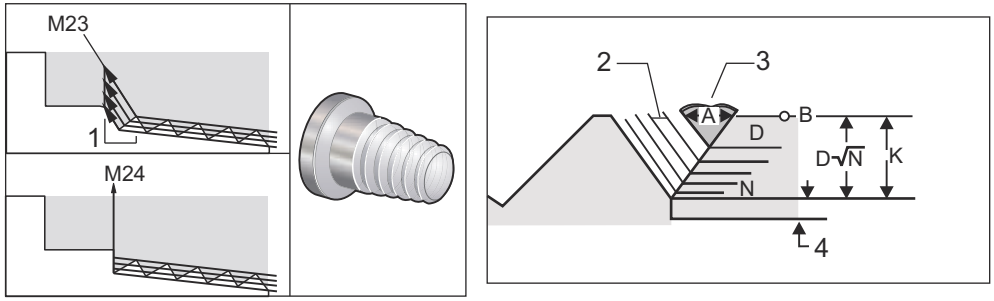

NOTE: *Setting 95 and 96 will affect the final chamfer size and angle.*

Four options for G76 Multiple Thread Cutting are available:

1. P1:Single edge cutting, cutting amount constant
2. P2:Double edge cutting, cutting amount constant
3. P3: Single edge cutting, cutting depth constant
4. P4: Double edge cutting, cutting depth constant

P1 and P3 both allow for single edge threading, but the difference is that with P3 a constant depth cut is done with every pass. Similarly, P2 and P4 options allow for double edge cutting with P4 giving constant depth cut with every pass. Based on industry experience, double edge cutting option P2 may give superior threading results.

D specifies the depth of the first cut. Each successive cut is determined by the equation D*sqrt(N) where N is the Nth pass along the thread. The leading edge of the cutter does all of the cutting. To calculate the X position of each pass you have to take the sum of all the previous passes, measured from the start point the X value of each pass

F7.35: G76 Thread Cutting Cycle, Multiple Pass

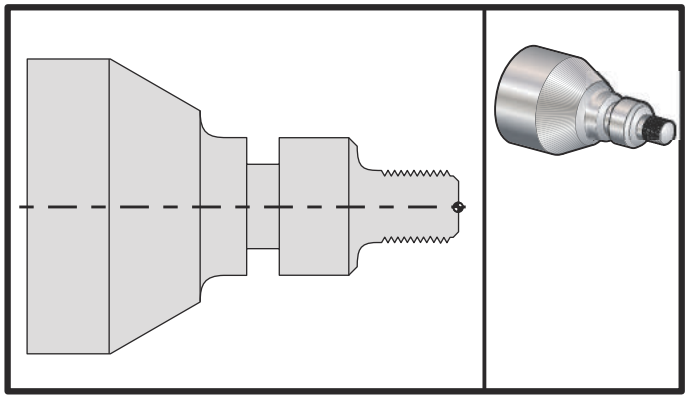

```
%
o60761 (G76 THREAD CUTTING MULTIPLE PASSES) ;
(G54 X0 is at the center of rotation) ;
(Z0 is on the face of the part) ;
(T1 is an OD thread tool) ;
(BEGIN PREPARATION BLOCKS) ;
T101 (Select tool and offset 1) ;
G00 G18 G20 G40 G80 G99 (Safe startup) ;
G50 S1000 (Limit spindle to 1000 RPM) ;
G97 S500 M03 (CSS off, Spindle on CW) ;
G00 G54 X1.2 Z0.3 (Rapid to 1st position) ;
M08 (Coolant on) ;
(BEGIN CUTTING BLOCKS) ;
G76 X0.913 Z-0.85 K0.042 D0.0115 F0.0714 (Begin G76) ;
(BEGIN COMPLETION BLOCKS) ;
G00 G53 X0 M09 (X home, coolant off) ;
G53 Z0 M05 (Z home, spindle off) ;
M30 (End program) ;
%
```

G80 Canned Cycle Cancel (Group 09)

G80 cancels all active canned cycles.

NOTE: *G00 or G01 also cancel canned cycles.*

G81 Drill Canned Cycle (Group 09)

***C** - C-Axis absolute motion command (optional)
F - Feed Rate
***L** - Number of repeats
R - Position of the R plane
***X** - X-axis motion command
***Y** - Y-axis absolute motion command
Z - Position of bottom of hole

* indicated optional

Also see `G241` for radial drilling and `G195`/`G196` for radial tapping with live tooling.

F7.36: `G81` Drill Canned Cycle: [1] Rapid, [2] Feed, [3] Start or end of stroke, [4] Starting plane, [R] R plane, [Z] Position at the bottom of the hole.

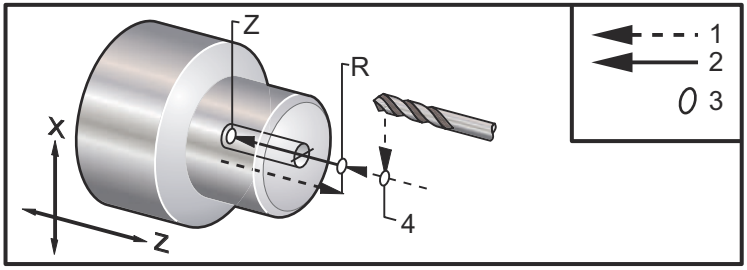

G82 Spot Drill Canned Cycle (Group 09)

***C** - C-Axis absolute motion command (optional)
F - Feed Rate in inches (mm) per minute
***L** - Number of repeats
P - The dwell time at the bottom of the hole
R - Position of the R plane
***X** - X-axis motion command
***Y** - Y-axis motion command
Z - Position of bottom of hole

* indicates optional

This G code is modal in that it activates the canned cycle until it is canceled or another canned cycle is selected. Once activated, every motion of X will cause this canned cycle to be executed.

Also, see `G242` for radial live tool spot drilling.

NOTE: *The P values are modal. This means if you are in the middle of a canned cycle and a `G04 Pnn` or an `M97 Pnn` is used the P value will be used for the dwell / subprogram as well as the canned cycle.*

F7.37: G82 Spot Drill Canned Cycle:[1] Rapid, [2] Feed, [3] Start or end of stroke, [4] Dwell, [5] Starting plane, [R] R plane, [Z] Position of the bottom of the hole.

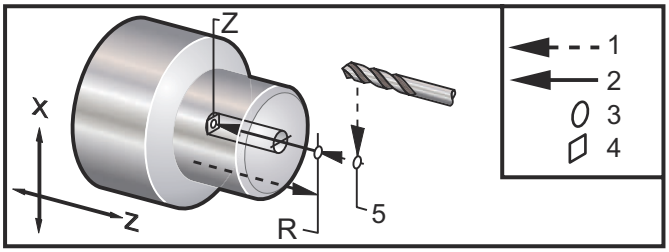

F7.38: G82 Y-Axis Drill

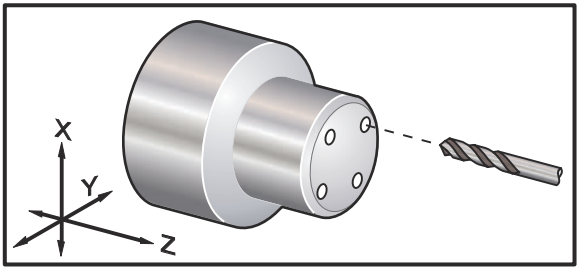


```
%
o60821 (G82 LIVE SPOT DRILL CYCLE) ;
(G54 X0 Y0 is at the center of rotation) ;
(Z0 is on the face of the part) ;
(T1 is a spot drill) ;
(BEGIN PREPARATION BLOCKS) ;
T101 (Select tool and offset 1) ;
G00 G18 G20 G40 G80 G99 (Safe startup) ;
G98 (Feed per min) ;
G00 G54 X1.5 C0. Z1. (Rapid to 1st position) ;
P1500 M133 (Live tool CW at 1500 RPM) ;
M08 (coolant on) ;
(BEGIN CUTTING CYCLE) ;
G82 C45. Z-0.25 F10. P80 (Begin G82) ;
C135. (2nd position) ;
C225. (3rd position) ;
C315. (4th position) ;
(BEGIN COMPLETION BLOCKS) ;
M135 (Live tool off) ;
G00 G53 X0 M09 (X home, coolant off) ;
G53 Z0 (Z home) ;
M30 (End program) ;
%
```

To calculate how long you should dwell at the bottom of your spot drill cycle, use the following formula:

P = Dwell Revolutions x 60000/RPM

If you want the tool to dwell for two full revolutions at its full Z depth in the program above (running at 1500 RPM), you would calculate:

2 x 60000 / 1500 = 80

Enter `P80` (80 milliseconds or P.08 (.08 seconds) on the `G82` line, to dwell for 2 revolutions at 1500 RPM.

G83 Normal Peck Drilling Canned Cycle (Group 09)

***C** - C-Axis absolute motion command (optional)
F - Feed Rate in inches (mm) per minute
***I** - Size of first cutting depth
***J** - Amount to reduce cutting depth each pass
***K** - Minimum depth of cut
***L** - Number of repeats
***P** - The dwell time at the bottom of the hole
***Q** - The cut-in value, always incremental
***R** - Position of the R plane
***X** - X-axis motion command
***Y** - Y-axis motion command
Z - Position of bottom of hole

* indicates optional

F7.39: `G83` Peck Drilling Canned Cycle: [1] Rapid, [2] Feed, [3] Start or end of stroke, [4] Dwell, [#22] Setting 22, [#52] Setting 52.

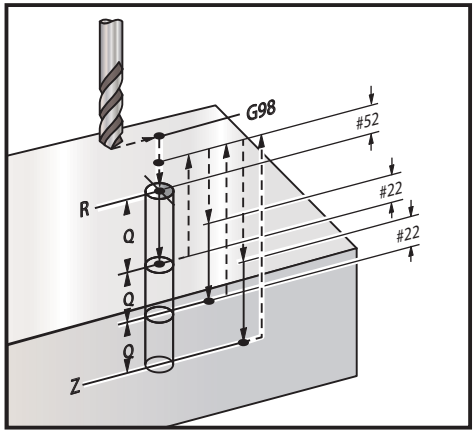

NOTE: *If I, J, and K are specified, a different operating mode is selected. The first pass will cut in the value of I, each succeeding cut will be reduced by amount J, and the minimum cutting depth is K. Do not use a Q value when programming with I,J, and K.*

Setting 52 changes the way G83 works when it returns to the R plane. Usually the R plane is set well outside the cut to insure that the chip clearing motion allows the chips to clear the hole. However, this is wasted motion when first drilling through this empty space. If Setting 52 is set to the distance required to clear chips, the R plane can be put much closer to the part being drilled. When the clear move to R occurs, the Z will be moved past R by this value in Setting 52. Setting 22 is the amount to feed in Z to get back to the same point at which the retraction occurred.

```
%
o60831 (G83 NORMAL PECK DRILLING) ;
(G54 X0 is at the center of rotation) ;
(Z0 is on the face of the part) ;
(T1 is a drill) ;
(BEGIN PREPARATION BLOCKS) ;
T101 (Select tool and offset 1) ;
G00 G18 G20 G40 G80 G99 (Safe startup) ;
G50 S1000 (Limit spindle to 1000 RPM) ;
G97 S500 M03 (CSS off, spindle on CW) ;
G00 G54 X0 Z0.25 (Rapid to 1st position) ;
M08 (Coolant on) ;
(BEGIN CUTTING BLOCKS) ;
G83 Z-1.5 F0.005 Q0.25 R0.1 (Begin G83)
(BEGIN COMPLETION BLOCKS)
G00 G53 X0 M09 (X home, coolant off) ;
G53 Z0 M05 (Z home, spindle off) ;
M30 ;
%
```

```
%
(LIVE PECK DRILL - AXIAL) ;
T1111 ;
G98 ;
G00 G54 X6. C0. Y0. Z1. ;
G00 X1.5 Z0.25 ;
G97 P1500 M133 ;
M08 ;
G83 G98 C45. Z-0.8627 F10. Q0.125 ;
C135. ;
```

```
C225. ;
C315. ;
G00 G80 Z0.25 ;
M135 ;
M09 ;
G28 H0. (Unwind C-Axis) ;
G00 G54 X6. Y0. Z1. ;
G18 ;
G99 ;
M01 ;
M30 ;
%
```

G84 Tapping Canned Cycle (Group 09)

F - Feed Rate
* **R** - Position of the R plane
S - RPM, called prior to G84
* **X** - X-axis motion command
Z - Position of bottom of hole

* indicates optional

Programming Notes:

- It is not necessary to start the spindle CW before this canned cycle. The control does this automatically.
- When G84 tapping on a lathe, it is simplest to use G99 Feed Per Revolution.
- The Lead is the distance traveled along a screw's axis, with each full revolution.
- The feedrate, when using G99, is equal to the Lead of the tap.
- An S value must be called prior to the G84. The S value determines the RPM of the tapping cycle.
- In Metric Mode (G99, with Setting 9 = **MM**), the feedrate is the metric equivalent of the lead, in **MM**.
- In Inch Mode (G99, with Setting 9 = **INCH**), the feedrate is the Inch equivalent of the lead, in inches.
- The lead (and G99 feedrate) of an M10 x 1.0mm tap is 1.0mm, or .03937" (1.0/25.4=.03937).

Examples:

1. The lead of a 5/16-18 tap is 1.411 mm (1/18*25.4 = 1.411), or .0556" (1/18 = .0556)
2. This canned cycle can be used on the secondary spindle of a Dual Spindle DS lathe, when prefaced by a G14.
   Refer to the G14 Secondary Spindle Swap on page **315** for more information.
3. For Axial Live-Tool tapping, use a G95 or G186 command.

4. For Radial Live-Tool tapping, use a G195 or G196 command.
5. For Reverse Tapping (left-hand thread) on the Main or Secondary Spindle, refer to page **371**.

More programming examples, in both Inch and Metric, are shown below:

F7.40: G84 Tapping Canned Cycle: [1] Rapid, [2] Feed, [3] Start or end of stroke, [4] Starting plane, [R] R plane, [Z] Position at the bottom of the hole.

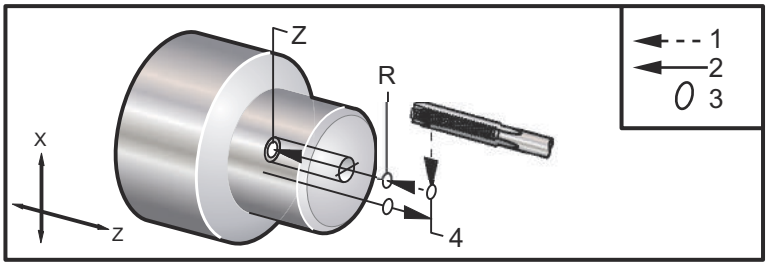


```
%
o60841 (IMPERIAL TAP, SETTING 9 = MM) ;
(G54 X0 is at the center of rotation) ;
(Z0 is on the face of the part)
(T1 is a 1/4-20 Tap) ;
G21 (ALARM if setting 9 is not MM) ;
(BEGIN PREPARATION BLOCKS) ;
T101 (Select tool and offset 1) ;
G00 G18 G40 G80 G99 (Safe startup) ;
G00 G54 X0 Z12.7 (Rapid to 1st position) ;
M08 (Coolant on) ;
S800 (RPM OF TAP CYCLE) ;
(BEGIN CUTTING BLOCK) ;
G84 Z-12.7 R12.7 F1.27 (1/20*25.4 = 1.27) ;
(BEGIN COMPLETION BLOCKS) ;
G00 G53 X0 M09 (X home, coolant off) ;
G53 Z0 M05 (Z home, spindle off) ;
M30 (End program) ;
%
```

```
%
o60842 (METRIC TAP, SETTING 9 = MM) ;
(G54 X0 is at the center of rotation) ;
(Z0 is on the face of the part)
(T1 is an M8 x 1.25 Tap) ;
G21 (ALARM if setting 9 is not MM) ;
(BEGIN PREPARATION BLOCKS) ;
T101 (Select tool and offset 1) ;
```

```
G00 G18 G40 G80 G99 (Safe startup) ;
G00 G54 X0 Z12.7 (Rapid to 1st position) ;
M08 (Coolant on) ;
S800 (RPM OF TAP CYCLE) ;
(BEGIN CUTTING BLOCK) ;
G84 Z-12.7 R12.7 F1.25 (Lead = 1.25) ;
(BEGIN COMPLETION BLOCKS) ;
G00 G53 X0 M09 (X home, coolant off) ;
G53 Z0 M05 (Z home, spindle off) ;
M30 (End program) ;
%


%
o60843 (IMPERIAL TAP, SETTING 9 = IN) ;
(G54 X0 is at the center of rotation) ;
(Z0 is on the face of the part)
(T1 is a 1/4-20 Tap) ;
G20 (ALARM if setting 9 is not INCH) ;
(BEGIN PREPARATION BLOCKS) ;
T101 (Select tool and offset 1) ;
G00 G18 G20 G40 G80 G99 (Safe startup) ;
G00 G54 X0 Z0.5 (Rapid to 1st position) ;
M08 (Coolant on) ;
S800 (RPM OF TAP CYCLE) ;
(BEGIN CUTTING BLOCK) ;
G84 Z-0.5 R0.5 F0.05 (Begin G84) ;
(1/20 = .05) ;
(BEGIN COMPLETION BLOCKS) ;
G00 G53 X0 M09 (X home, coolant off) ;
G53 Z0 M05 (Z home, spindle off) ;
M30 (End program) ;
%


%
o60844 (METRIC TAP, SETTING 9 = IN) ;
(G54 X0 is at the center of rotation) ;
(Z0 is on the face of the part)
(T1 is an M8 x 1.25 Tap) ;
G20 (ALARM if setting 9 is not INCH) ;
(BEGIN PREPARATION BLOCKS) ;
T101 (Select tool and offset 1) ;
G00 G18 G20 G40 G80 G99 (Safe startup) ;
G00 G54 X0 Z0.5 (Rapid to 1st position) ;
M08 (Coolant on) ;
S800 (RPM OF TAP CYCLE) ;
```

```
(BEGIN CUTTING BLOCK) ;
G84 Z-0.5 R0.5 F0.0492 (1.25/25.4 = .0492) ;
(BEGIN COMPLETION BLOCKS) ;
G00 G53 X0 M09 (X home, coolant off) ;
G53 Z0 M05 (Z home, spindle off) ;
M30 (End program) ;
%
```

G85 Boring Canned Cycle (Group 09)

NOTE: *This cycle feeds in and feeds out.*

F - Feed Rate
***L** - Number of repeats
***R** - Position of the R plane
***X** - X-axis motion command
***Y** - Y-axis motion command
Z - Position of bottom of hole

* indicates optional

F7.41: G85 Boring Canned Cycle: [1] Rapid, [2] Feed, [3] Start or end of stroke, [4] Starting plane, [R] R plane, [Z] Position of the bottom of the hole.

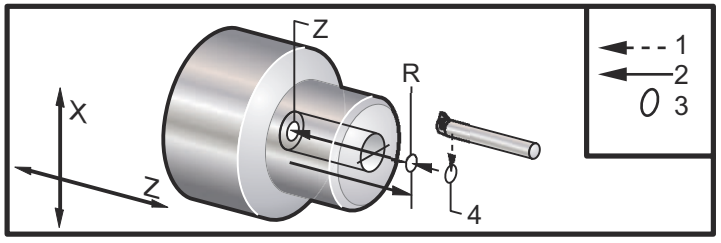

G86 Bore and Stop Canned Cycle (Group 09)

NOTE: *The spindle stops and it rapids out of the hole.*

F - Feed Rate
***L** - Number of repeats
***R** - Position of the R plane
***X** - X-axis motion command
***Y** - Y-axis motion command
Z - Position of bottom of hole

* indicates optional

This G code stops the spindle once the tool reaches the bottom of the hole. The tool retracts once the spindle has stopped.

F7.42: G86 Bore and Stop Canned Cycle: [1] Rapid, [2] Feed, [3] Start or end of stroke, [4] Starting plane, [R] R plane, [Z] Position of the bottom of the hole.

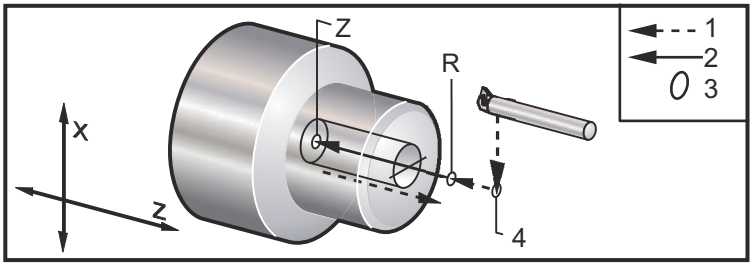

G89 Bore and Dwell Canned Cycle (Group 09)

NOTE: *This cycle feeds in and feeds out.*

F - Feed Rate
***L** - Number of repeats
***P** - The dwell time at the bottom of the hole
***R** - Position of the R plane
***X** - X-axis motion command
***Y** - Y-axis motion command
Z - Position of bottom of hole

* indicates optional

NOTE: *The P values are modal. This means if you are in the middle of a canned cycle and a `G04 Pnn` or an `M97 Pnn` is used the P value will be used for the dwell / subprogram as well as the canned cycle.*

F7.43: `G89` Bore and Dwell Canned Cycle: [1] Feed, [2] Start or end of stroke, [3] Dwell, [4] Starting plane, [R] R plane, [Z] Position of the bottom of the hole.

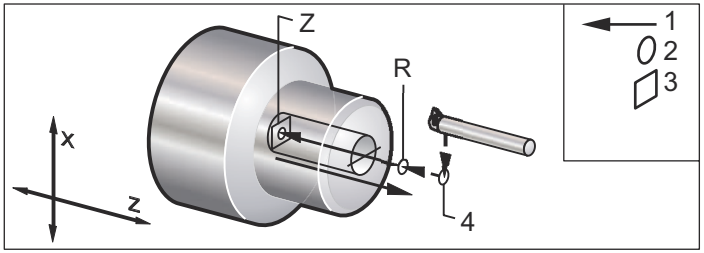

G90 O.D./I.D. Turning Cycle (Group 01)

F(**E**) - Feed rate
***I** - Optional distance and direction of X Axis taper, radius
***U** - X-axis incremental distance to target, diameter
***W** - Z-axis incremental distance to target
X - X-axis absolute location of target
Z - Z-axis absolute location of target

*indicates optional

F7.44: `G90` O.D./I.D. Turning Cycle: [1] Rapid, [2] Feed, [3] Programmed path, [4] Cut allowance, [5] Finish allowance, [6] Start position, [7] Target.

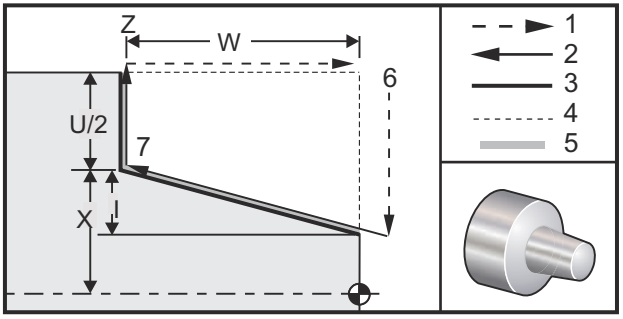

`G90` is used for simple turning, however, multiple passes are possible by specifying the `X` locations of additional passes.

Straight turning cuts are made by specifying `X`, `Z` and `F`. By adding an `I` value, a taper cut is made. The amount of taper is referenced from the target. That is, `I` is added to the value of `X` at the target.

Any of the four ZX quadrants can be programmed using U, W, X, and Z; the taper is positive or negative. The following figure gives a few examples of the values required for machining in each of the four quadrants.

F7.45: G90-G92 Address Relationships

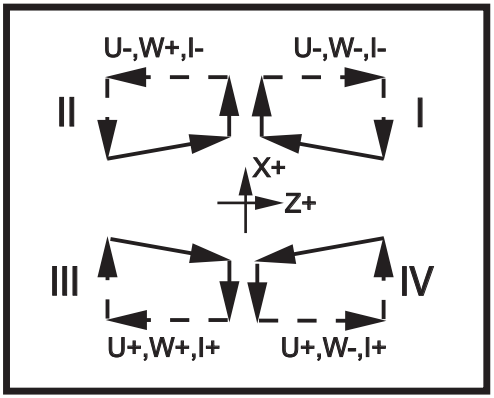

G92 Threading Cycle (Group 01)

F(**E**) - Feed rate, the lead of the thread
***I** - Optional distance and direction of X Axis taper, radius
***Q** - Start Thread Angle
***U** - X-axis incremental distance to target, diameter
***W** - Z-axis incremental distance to target
X - X-axis absolute location of target
Z - Z-axis absolute location of target

* indicates optional

Programming Notes:

- Setting 95/Setting 96 determine chamfer size/angle. M23/M24 turn chamfering on/off.
- G92 is used for simple threading, however, multiple passes for threading are possible by specifying the X locations of additional passes. Straight threads are made by specifying X, Z, and F. By adding an I value, a pipe or taper thread is cut. The amount of taper is referenced from the target. That is, I is added to the value of X at the target. At the end of the thread, an automatic chamfer is cut before reaching the target; default for this chamfer is one thread at 45 degrees. These values can be changed with Setting 95 and Setting 96.
- During incremental programming, the sign of the number following the U and W variables depends on the direction of the tool path. For example, if the direction of a path along the X-axis is negative, the value of U is negative.

F7.46: G92 Threading Cycle: [1] Rapid, [2] Feed, [3] Programmed path, [4] Start position, [5] Minor diameter, [6] 1/Threads per inch = Feed per revolution (Inch formula; F = lead of thread) .

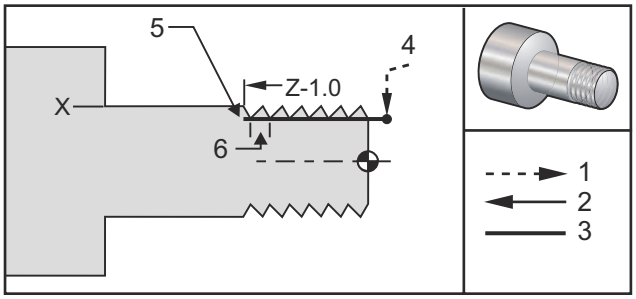


```
%
O60921 (G92 THREADING CYCLE) ;
(G54 X0 is at the center of rotation) ;
(Z0 is on the face of the part) ;
(T1 is an OD thread tool) ;
(BEGIN PREPARATION BLOCKS) ;
T101 (Select tool and offset 1) ;
G00 G18 G20 G40 G80 G99 (Safe startup) ;
G50 S1000 (Limit spindle to 1000 RPM) ;
G97 S500 M03 (CSS off, Spindle on CW) ;
G00 G54 X0 Z0.25 (Rapid to 1st position) ;
M08 (Coolant on) ;
(BEGIN CUTTING BLOCKS) ;
X1.2 Z.2 (Rapid to clear position) ;
G92 X.980 Z-1.0 F0.0833 (Begin Thread Cycle) ;
X.965 (2nd pass) ;
X.955 (3rd pass) ;
X.945 (4th pass) ;
X.935 (5th pass) ;
X.925 (6th pass) ;
X.917 (7th pass) ;
X.910 (8th pass) ;
X.905 (9th pass) ;
X.901 (10th pass) ;
X.899 (11th pass) ;
(BEGIN COMPLETION BLOCKS) ;
G00 G53 X0 M09 (X home, coolant off) ;
G53 Z0 M05 (Z home, spindle off) ;
M30 (End program) ;
%
```

G94 End Facing Cycle (Group 01)

F(**E**) - Feed rate
***K** - Optional distance and direction of Z Axis coning
***U** - X-axis incremental distance to target, diameter
***W** - Z-axis incremental distance to target
X - X-axis absolute location of target
Z - Z-axis absolute location of target

*indicates optional

F7.47: `G94` End Facing Cycle: [1] Rapid, [2] Feed, [3] Programmed path, [4] Cut allowance, [5] Finish allowance, [6] Start position, [7] Target.

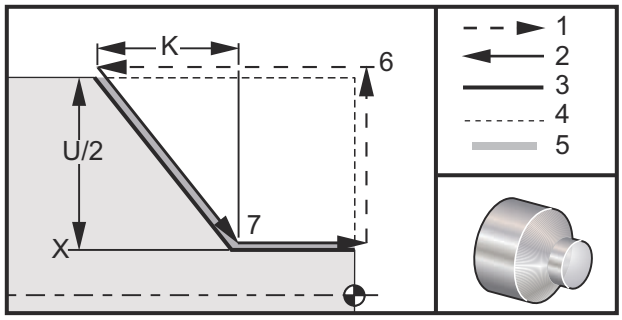

Straight end facing cuts can be made by specifying `X`, `Z` and `F`. By adding `K` a cone-shaped face is cut. The amount of coning is referenced from the target. That is `K` is added to the value of `X` at the target.

Any of the four ZX quadrants is programmed by varying `U`, `W`, `X`, and `Z`. The coning is positive or negative. The following figure gives a few examples of the values required for machining in each of the four quadrants.

During incremental programming, the sign of the number following the `U` and `W` variables depends on the direction of the tool path. If the direction of a path along the X-axis is negative, the value of `U` is negative.

F7.48: G94 Address Relationships: [S] Start position.

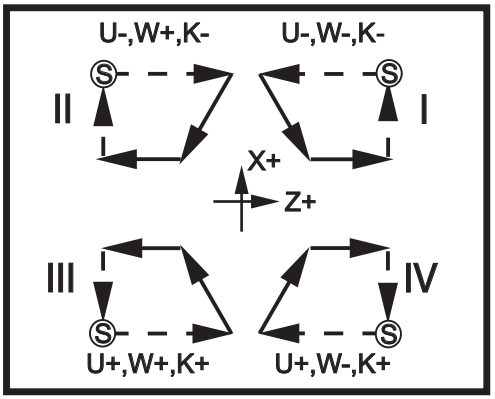

G95 Live Tooling Rigid Tap (Face) (Group 09)

***C** - C-Axis absolute motion command (optional)
F - Feed Rate
R - Position of the R plane
S - RPM, called prior to G95
W - Z-axis incremental distance
X - Optional Part Diameter X-axis motion command
***Y** - Y-axis motion command
Z - Position of bottom of hole

* indicates optional

G95 Live Tooling Rigid Tapping is an axial tapping cycle similar to G84 Rigid Tapping in that it uses the F, R, X and Z addresses, however, it has the following differences:

- The control must be in G99 Feed per Revolution mode in order for tapping to work properly.
- An S (spindle speed) command must have been issued prior to the G95.
- The X Axis must be positioned between machine zero and the center of the main spindle, do not position beyond spindle center.

```
%
o60951 (G95 LIVE TOOLING RIGID TAP) ;
(G54 X0 Y0 is at the center of rotation) ;
(Z0 is on the face of the part) ;
(T1 is a 1/4-20 tap) ;
(BEGIN PREPARATION BLOCKS) ;
T101 (Select tool and offset 1) ;
G00 G18 G20 G40 G80 G99 (Safe startup) ;
G00 G54 X1.5 C0. Z0.5 (Rapid to 1st position) ;
M08 (Coolant on) ;
(BEGIN CUTTING CYCLE) ;
```

```
S500 (Select tap RPM) ;
G95 C45. Z-0.5 R0.5 F0.05 (Tap to Z-0.5) ;
C135. (next position) ;
C225. (next position) ;
C315. (last position) ;
(BEGIN COMPLETION BLOCKS) ;
G00 G53 X0 M09 (X home, coolant off) ;
G53 Z0 (Z home) ;
M30 (End program) ;
%
```

G96 Constant Surface Speed ON (Group 13)

G96 commands the control to maintain a constant cutting speed at the tip of the tool. The spindle RPM is based on the diameter of the part where the cut is taking place, and the commanded S value (RPM=3.82xSFM/DIA). This means the spindle speed increases as the tool gets closer to X0. When Setting 9 is set to **INCH**, the S value specifies Surface Feet Per Minute. When Setting 9 is set to **MM**, the S value specifies Surface Meters Per Minute.

WARNING: *It is safest to specify a maximum spindle speed for the Constant Surface Speed feature. Use G50 to set a maximum spindle RPM. Not setting a limit allows the spindle speed to increase as the tool reaches the center of the part. The excessive speed can throw parts and damage tooling.*

G97 Constant Surface Speed OFF (Group 13)

This commands the control to NOT adjust the spindle speed based on the diameter of cut and cancels any G96 command. When G97 is in effect, any S command is revolutions per minute (RPM).

G98 Feed Per Minute (Group 10)

G98 changes how the F address code is interpreted. The value of F indicates inches per minute when Setting 9 is set to **INCH**, and F indicates millimeters per minute when Setting 9 is set to **MM**.

G99 Feed Per Revolution (Group 10)

This command changes how the F address is interpreted. The value of F indicates inches per revolution of the spindle when Setting 9 is set to **INCH**, while F indicates millimeters per revolution of the spindle when Setting 9 is set to **MM**.

G100 Disable / G101 Enable Mirror Image (Group 00)

***X** - X-axis command
***Z** - Z-axis command

* indicates optional. At least one is required.

Programmable mirror image can be turned on or off individually for the X and/or Z Axis. The bottom of the screen indicates when an axis is mirrored. These G codes are used in a command block without any other G codes and do not cause any Axis motion. `G101` turns on mirror image for any Axis listed in that block. `G100` turns off mirror image for any Axis listed in the block. The actual value given for the `X` or `Z` code has no effect; `G100` or `G101` by itself has no effect. For example, `G101 X 0` turns on X-axis mirror.

NOTE: *Settings 45 and 47 may be used to manually select mirror image.*

G103 Limit Block Look-Ahead (Group 00)

G103 specifies the maximum number of blocks the control looks ahead (Range 0-15), for example:

```
G103 [P..] ;
```

During machine motions, the control prepares future blocks (lines of code) ahead of time. This is commonly called “Block Look-ahead.” While the control executes the current block, it has already interpreted and prepared the next block for continuous motion.

A program command of `G103 P0`, or simply `G103`, disables block limiting. A program command of `G103 Pn` limits look-ahead to `n` blocks.

`G103` is useful for debugging macro programs. The control interprets Macro expressions during look-ahead time. If you insert a `G103 P1` into the program, the control interprets macro expressions (1) block ahead of the currently executing block.

It is best to add several empty lines after a `G103 P1` is called. This ensures that no lines of code after the `G103 P1` are interpreted until they are reached.

`G103` affects cutter compensation and High Speed Machining.

NOTE: *The P values are modal. This means if you are in the middle of a canned cycle and a `G04 Pnn` or an `M97 Pnn` is used the P value will be used for the dwell / subprogram as well as the canned cycle.*

G105 Servo Bar Command

This is the G-code used to command a Bar Feeder.

```
G105 [In.nnnn] [Jn.nnnn] [Kn.nnnn] [Pnnnnn] [Rn.nnnn]
```

I - Optional Initial Push Length (macro variable #3101) Override (variable #3101 if I is not commanded)
J - Optional Part Length + Cutoff (macro variable #3100) Override (variable #3100 if J is not commanded)
K - Optional Min Clamping Length (macro variable #3102) Override (variable #3102 if K is not commanded)
P - Optional cutoff subprogram
R - Optional spindle orientation for new bar

I, J, K are overrides to macro variable values listed on the Current Commands Page. The control applies the override values only to the command line in which they are located. The values stored in Current Commands are not modified.

NOTE: *A G105 with a J code will not increment the counter. The J code is intended for double push operation to make a long part.*

G107 Cylindrical Mapping (Group 00)

Y - Y-Axis command
C - C-Axis command
***R** - Radius of the rotary axis
***Q** - Diameter of the cylindrical surface

* indicates optional

- Enable G107 mode with Y-axis as linear and C-axis as rotary axis. If address code R or Q is not specified, an alarm is generated.
- G107 R/Q; change the radius of the mapping cylinder.
- G107; Disables the G107 mode.

The following program **O00555** use I,J and K for the arc center point for the 0.500” radius in the corners. Program **O00556** uses the R in place of the I,J and K for the arc center points.

```
%O00555 (G107 CYLINDRICAL MAPPING);
T1717;
M133 P500;
G00 X4.2 Z1.;
Z-3.;
```

```
G98;
M15;
G107 Y0 C0 Q4.;
G01 X3.5 F40.;
G01 G41 Y-1.;
Z-4.5;
G03 Z-5. Y-0.5 J0.5;
G01 Y0.5;
G03 Z-4.5 Y1. K0.5;
G01 Z-1.5;
G03 Y0.5 Z-1. J-0.5;
G01 Y-0.5;
G03 Y-1. Z-1.5 K-0.5;
G01 Z-3.;
G01 G40 Y0;
G00 X4.2;
G107;
Z1.;
G28;
M30;
%

%O00556 (G107 CYLINDRICAL MAPPING R);
T1717;
M133 P500;
G00 X4.2 Z1.;
Z-3.;
G98;
M15;
G107 Y0 C0 Q4.;
G01 X3.965 F40.;
G01 G41 Y-1.;Z-4.5;
G03 Z-5. Y-0.5 R0.5;
G01 Y0.5;
G03 Z-4.5 Y1. R0.5;
G01 Z-1.5;
G03 Y0.5 Z-1. R0.5;
G01 Y-0.5;
G03 Y-1. Z-1.5 R0.5;
G01 Z-3.;
G01 G40 Y0;
G00 X4.2;
G107;
Z1.;
G28;
M30;%
```

G110 / G111 Coordinate System #7/#8 (Group 12)

G110 selects #7 and G111 selects #8 additional work offset coordinates. All subsequent references to axes positions are interpreted in the new work offset coordinate system. Operation of G110 and G111 is the same as G154 P1 and G154 P2.

G112 XY to XC Interpolation (Group 04)

The G112 XY to XC coordinate interpolation feature lets you program subsequent blocks in Cartesian XY coordinates, which the control automatically converts to polar XC coordinates. While it is active, the control uses the G17 XY for G01 linear XY strokes and G02 and G03 for circular motion. G112 also converts X, Y position commands into rotary C-Axis and linear X-axis moves.

G112 Program Example

F7.49: G112 XY to XC Interpolation

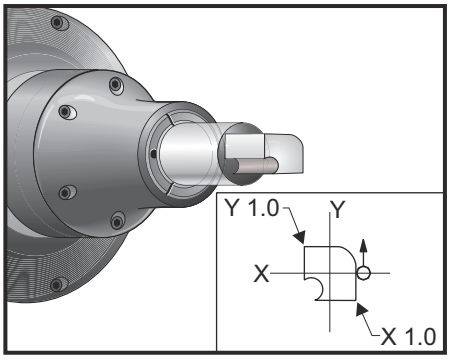


```
%
o61121 (G112 XY TO XC INTERPOLATION) ;
(G54 X0 Y0 is at the center of rotation) ;
(Z0 is on the face of the part) ;
(T1 is an end mill) ;
(BEGIN PREPARATION BLOCKS) ;
T101 (Select tool and offset 1) ;
G00 G18 G20 G40 G80 G99 (Safe startup) ;
G17 (Call XY plane) ;
G98 (Feed per min) ;
P1500 M133 (Live tool CW at 1500 RPM) ;
G00 G54 X0.875 C0. Z0.1 (Rapid to 1st position) ;
G112 (XY to XC interpretation);
M08 (Coolant on) ;
(BEGIN CUTTING BLOCKS) ;
G1 Z0. F15. (Feed towards face) ;
Y0.5 F5. (Linear feed) ;
G03 X.25 Y1.125 R0.625 (Feed CCW) ;
```

```
G01 X-0.75 (Linear feed) ;
G03 X-0.875 Y1. R0.125 (Feed CCW) ;
G01 Y-0.25 (Linear Feed) ;
G03 X-0.75 Y-0.375 R0.125 (Feed CCW) ;
G02 X-0.375 Y-0.75 R0.375 (Feed CW) ;
G01 Y-1. (Linear feed) ;
G03 X-0.25 Y-1.125 R0.125 (Feed CCW) ;
G01 X0.75 (Linear feed) ;
G03 X0.875 Y-1. R0.125 (Feed CCW) ;
G01 Y0. (Linear feed) ;
G00 Z0.1 (Rapid retract) ;
(BEGIN COMPLETION BLOCKS) ;
G113 (Cancel G112) ;
M135 (Live tool off) ;
G18 (Return to XZ plane) ;
G00 G53 X0 M09 (X home, coolant off) ;
G53 Z0 (Z home) ;
M30 (End program) ;
```

G113 Cancel XY to XC Interpolation (Group 04)

G113 cancels the Cartesian to Polar coordinate conversion.

G114-G129 Coordinate System #9-#24 (Group 12)

G114 - G129 codes are user-settable coordinate systems, #9 - #24, for work offsets. All subsequent references to axes' positions are interpreted in the new coordinate system. Work coordinate system offsets are entered from the **Active Work Offset** display page. Operation of G114 - G129 codes is the same as G154 P3 - G154 P18.

G154 Select Work Coordinates P1-P99 (Group 12)

This feature provides 99 additional work offsets. G154 with a P value from 1 to 99 activates additional work offsets. For example G154 P10 selects work offset 10 from the list of additional work offsets.

NOTE: *G110 to G129 refer to the same work offsets as G154 P1 through P20; they can be selected by using either method.*

When a G154 work offset is active, the heading in the upper right work offset will show the G154 P value.

NOTE: *The P values are modal. This means if you are in the middle of a canned cycle and a `G04 Pnn` or an `M97 Pnn` is used the P value will be used for the dwell / subprogram as well as the canned cycle.*

`G154` work offsets format

```
#14001-#14006 G154 P1 (also #7001-#7006 and G110)
#14021-#14026 G154 P2 (also #7021-#7026 and G111)
#14041-#14046 G154 P3 (also #7041-#7046 and G112)
#14061-#14066 G154 P4 (also #7061-#7066 and G113)
#14081-#14086 G154 P5 (also #7081-#7086 and G114)
#14101-#14106 G154 P6 (also #7101-#7106 and G115)
#14121-#14126 G154 P7 (also #7121-#7126 and G116)
#14141-#14146 G154 P8 (also #7141-#7146 and G117)
#14161-#14166 G154 P9 (also #7161-#7166 and G118)
#14181-#14186 G154 P10 (also #7181-#7186 and G119)
#14201-#14206 G154 P11 (also #7201-#7206 and G120)
#14221-#14221 G154 P12 (also #7221-#7226 and G121)
#14241-#14246 G154 P13 (also #7241-#7246 and G122)
#14261-#14266 G154 P14 (also #7261-#7266 and G123)
#14281-#14286 G154 P15 (also #7281-#7286 and G124)
#14301-#14306 G154 P16 (also #7301-#7306 and G125)
#14321-#14326 G154 P17 (also #7321-#7326 and G126)
#14341-#14346 G154 P18 (also #7341-#7346 and G127)
#14361-#14366 G154 P19 (also #7361-#7366 and G128)
#14381-#14386 G154 P20 (also #7381-#7386 and G129)
#14401-#14406 G154 P21
#14421-#14426 G154 P22
#14441-#14446 G154 P23
#14461-#14466 G154 P24
```

```
#14481-#14486 G154 P25

#14501-#14506 G154 P26

#14521-#14526 G154 P27

#14541-#14546 G154 P28

#14561-#14566 G154 P29

#14581-#14586 G154 P30

#14781-#14786 G154 P40

#14981-#14986 G154 P50

#15181-#15186 G154 P60

#15381-#15386 G154 P70

#15581-#15586 G154 P80

#15781-#15786 G154 P90

#15881-#15886 G154 P95

#15901-#15906 G154 P96

#15921-#15926 G154 P97

#15941-#15946 G154 P98

#15961-#15966 G154 P99
```

G156 Broaching Canned Cycle (Group 09)

Z - Z-axis absolute location total pecking depth.
W - Z-axis incremental distance to total pecking depth.
* **Y** - Y-axis absolute location of furthest slice cycle (diameter).
* **V** - Y-axis incremental distance to furthest slice (diameter).
X - X-axis absolute location of furthest slice cycle (diameter)
* **U** - X-axis incremental distance to furthest slice (diameter).
* **I** - X-axis size of increment between slice cycles.
* **K** - Z-axis size of increment between pecks in a cycle.
* **F** - Feed rate per minute.
* **C** - C-axis position.
* **D** - Tool clearance when returning to starting plane.

*indicates optional

F7.50: G156 Broaching Canned Cycle: [1] Rapid, [2] Feed, [3] Programmed Path, [C] Clearance Point, [K] Peck ,[22] Peck retraction (Setting 22).

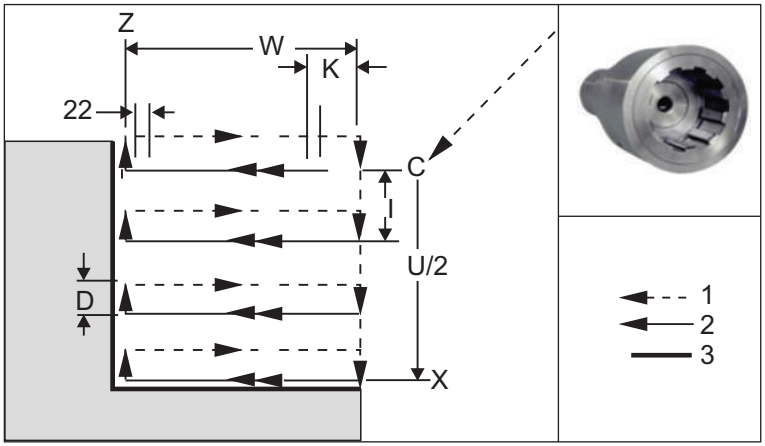

F7.51: Broaching operations canned cycle can be done using a single tool path (with adjustable programmable Pecks) when using a special broaching shape tool.

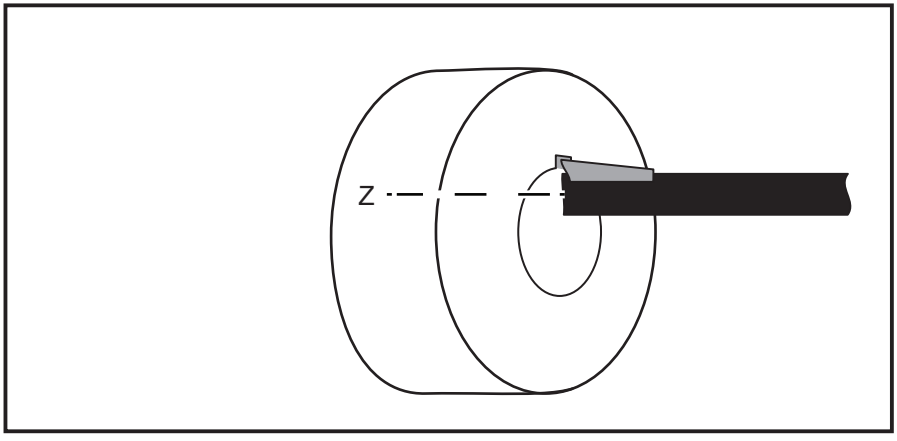

Spindle orient command M19 P/R code which used to position the spindle before broaching must be used first before executing G156 broaching canned cycle.

NOTE: *M19, P, or R should not be on the same line as G156. M19, P, or R value should not be negative. See*

M19

for more information.

When K is added to a G156 block, then pecking will be performed at each interval specified by K.

The D code can be used for grooving and turning to provide material clearance when returning to starting plane S.

The D code command is used to provide a tool clearance shift, in the X-axis before returning in the Z-axis to the "C" clearance point.

When an X/U, or Y/V code is added to a G156 block and the current (i.e. actual) X/U, Y/V axes machine position not at the position defined by G156 X/U, Y/V, then a minimum of two pecking canned cycles will occur, one at the current (actual) location of the machine X/U, Y/V axes, and another one at the X/U, Y/V location set by G156.

The I code is the incremental distance (slices cycle) between the start position S toward the target X/U, Y/V Axes positions (i.e. the thickness of each slice).

Adding an I will performs multiple, evenly spaced, slice cycles between the starting position S and X/U, Y/V Axes target position.

When the distance between S and target X/U, Y/V is not evenly divisible by I, then the last interval is less than I.

The spindles shall be positioned first (Main/Sup spindle) by either having the C-axis engaged (For Main spindle) or spindle to be oriented (Main/Sub) before staring the broach cycle.

NOTE: *An alarm will be generated when using Cutting feed rate as unit/revolution with Lathe broaching canned cycle.*

G112 (Cartesian to Polar coordinate transformation feature) is not allowed to be used in lathe broaching canned cycle and the control shall alarm out.

The tool clearance shift direction (i.e. shift in + X or - X, ZX plane,) will be depend on the sign of the D value (Positive/Negative).

When the D has a positive value, the tool moves in the positive direction of the X-axis.

When the D has a negative value, the tool moves further in the negative direction of the X-axis.

When D has a zero value or it not specified with the G156 lathe broaching canned cycle, then there shall be no tool clearance shift in the X-axis before returning in the Z-axis to the "C" clearance point.I.e. the tool returning in the Z-axis to the "C" clearance point will use the same peck path in the opposite direction.

NOTE: *An alarm will be generated if any spindle commanded to turn (other than spindle orient/ c axis position) within broaching canned cycle, or the broaching canned cycle is starting the Pecks cycle and the spindle is still turning.*

`Cxx` (position the C axis) could be use before or on the same line of `G156` broaching canned cycle.

Using the spindle brake before starting the broach cycle is recommended, but is not required.

NOTE: *The broaching canned cycle is a modal, and it shall be repeated on each line within the canned cycle uses any broaching address code. Refer to examples below:*

T7.1: Lathe Broaching: Example 1

G-Code	Program Sequence

`%`
`O41322 ( BROACH SAMPLE PROGRAM);`
`G00 G54 G18 G40 G80 G97 G98;`
`G0 T101;`
`X1. Z.25;`
`C0.;`
`G156 X1.05 Y0. Z-1. I.0025 D0.01 F150.;`
`C45.;`
`C90.;`
`C135.;`
`C180.;`
`G80 G0 Z.25;`
`G28 X0. Z0.;`
`M30;`
`%`
	• Safe Start Line
	• Tool 1 Offset 1
	• Rapid to Position
	• Position to C0.
	• Broach operations canned cycle start.
	• C-axis position.
	• End of Canned Cycle.

T7.2: Lathe Broaching: Example 2

G-Code	Program Sequence
% G156 X-10. Y-2.0 Z-12.0 I0.5 K0.5 F10.; X-5. Y-1.5 Z-10.0 I2.0 K2.0; I1.0 K1.0; C90.; C45.0 X-5. Z-10.0 I2.0 K2.0; G00 G80; %	• Lathe broaching operations canned cycle start. • Perform another broach with these new values at the current angle. • Perform another broach with these new values at the current angle. • Perform another broach at the new angle using the last specified address codes. • Rotate to new angle then broach using the new address codes. • End of canned cycle.

T7.3: Lathe Broaching: Example 3

G-Code	Program Sequence
% G156 X-10. Z-12.0 I0.5 K0.5 F10. C45.; %	• Position the C-axis first, then start the Lathe broaching operations canned cycle start (Spindle should not be turning).

T7.4: Lathe Broaching: Example 4

G-Code	Program Sequence
% M19 P45 (or R45); G156 X-10. Z-12.0 I0.5 K0.5 F10.; M19 P90; M19 P135; C180.; G00 G80; %	• Position the spindle (Using Spindle Orient). • Lathe broaching operations canned cycle start. • Repeat the canned cycle at this position. • Repeat the canned cycle at this position. • Position the C axis first (Using C-axis), then start the Lathe broaching operations canned cycle start. • End of canned cycle. .

T7.5: Lathe Broaching: Example 5

G-Code	Program Sequence
% C45.; G156 X-10. Z-12.0 I0.5 K0.5 F10.; C90.; C135.; M19 R180.; M03 S2000; M19 P200.; G00 G80; %	• Position the spindle (Using C axis) • Lathe broaching operations canned cycle start • Repeat the canned cycle at this position • Repeat the canned cycle at this position • Using a different method (not C axis) to Position the spindle first, then start the Lathe broaching operations canned cycle start. • M03 S2000; Alarm: The spindle is running. • End of canned cycle .

T7.6: Lathe Broaching: Example 6

G-Code	Program Sequence
% M03 S2000; G156 X-10. Z-12.0 I0.5 K0.5 F10.; %	• Run the spindle • Alarm: The spindle is running. .

G167 - Modify Setting (Group 00)

P - This code specifies the setting number.
Q - specifies the setting value. This can be a decimal numeric value or an enumerated representation for unit-less settings.
K - the number after the K code specifies a guard code for permanent changes.

This G-code allows the user permanently make changes to settings during program execution.

The control will generate an Alarm when:

- the P or Q code is missing.
- the P code is not a valid setting number.
- the Q code is not a valid for the setting number.

Examples of G167:

Example #1

```
G167 P250 Q1 K10755;
```

Turns on setting 250 Mirror Image C Axis.

Example #2

```
G167 P84 Q3 K10755;
```

Sets setting 84 Tool Overload Action to Autofeed.

Example #3

```
G167 P142 Q1.25 K10755;
```

Sets setting 142 Offset Chng Tolerance to 1.25.

G184 Reverse Tapping Canned Cycle For Left Hand Threads (Group 09)

F - Feed Rate in inches (mm) per minute
R - Position of the R plane
S - RPM, called prior to G184 is necessary
***W** - Z-axis incremental distance
***X** - X-axis motion command
Z - Position of bottom of hole

* indicates optional

Programming Notes: When tapping, the feedrate is the lead of the thread. See example of G84, when programmed in G99 Feed per Revolution.

It is not necessary to start the spindle CCW before this canned cycle; the control does this automatically.

F7.52: G184 Reverse Tapping Canned Cycle: [1] Rapid, [2] Feed, [3] Start or end of stroke, [4] Left-hand tap, [5] Starting plane, [R] R plane, [Z] Position of the bottom of the hole.

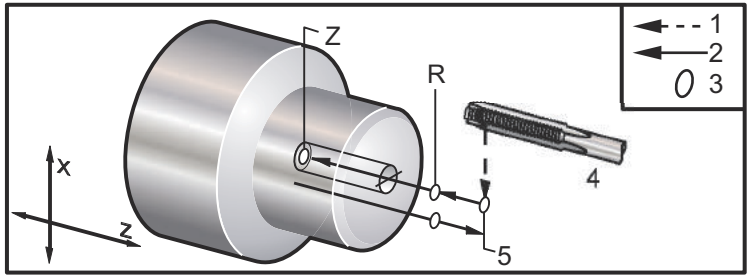

G186 Reverse Live Tool Rigid Tap (For Left Hand Threads) (Group 09)

F - Feed Rate
C - C-Axis position
R - Position of the R plane
S - RPM, called prior to G186 is necessary
W - Z-axis incremental distance
***X** - Part Diameter X-axis motion command
***Y** - Y-axis motion command
Z - Position of bottom of hole

* indicates optional

F7.53: G95, G186 Live Tooling Rigid Tapping: [1] Rapid, [2] Feed, [3] Start or end of stroke, [4] Starting plane, [R] R plane, [Z] Position of the bottom of the hole.

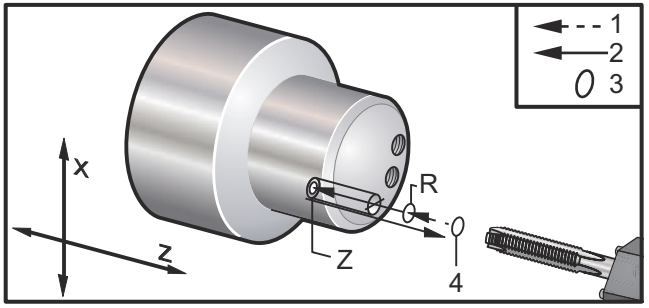

It is not necessary to start the spindle CW before this canned cycle; the control does this automatically. See G84.

G187 Accuracy Control (Group 00)

G187 is an accuracy command that can set and control both the smoothness and max corner rounding value when cutting a part. The format for using G187 is G187 Pn Ennnn.

P - Controls the smoothness level, P1(rough), P2(medium), or P3(finish). Temporarily overrides Setting 191.
E - Sets the max corner rounding value. Temporarily overrides Setting 85.

Setting 191 sets the default smoothness to the user specified **ROUGH**, **MEDIUM**, or **FINISH** when G187 is not active. The **Medium** setting is the factory default setting.

NOTE: *Changing Setting 85 to a low value may make the machine operate as if it is in exact stop mode.*

NOTE: *Changing setting 191 to* **FINISH** *will take longer to machine a part. Use this setting only when needed for the best finish.*

G187 Pm Ennnn sets both the smoothness and max corner rounding value. G187 Pm sets the smoothness but leaves max corner rounding value at its current value. G187 Ennnn sets the max corner rounding but leaves smoothness at its current value. G187 by itself cancels the E value and sets smoothness to the default smoothness specified by Setting 191. G187 will be canceled whenever **[RESET]** is pressed, M30 or M02 is executed, the end of program is reached, or **[EMERGENCY STOP]** is pressed.

G195 Forward Live Tool Radial Tapping (Diameter) / G196 Reverse Live Tool Radial Tapping (Diameter) (Group 09)

F - Feed Rate per revolution (G99)
***U** - X-Axis incremental distance to the bottom of hole
S - RPM, called prior to G195
X - X- Axis absolute position at the bottom of hole
***Z** - Z-Axis absolute position motion command
R - Position of the R plane
***C** - C-Axis absolute motion command
***Y** - Y-Axis absolute motion command
***W** - Z-Axis incremental motion command
***E** - Chip-clean RPM (Spindle reverses to remove chips after each hole)

* indicates optional

This G-code is modal in that it activates the canned cycle until it is canceled or another canned cycle is selected. The cycle begins from the current position, tapping to the X-Axis depth specified. An R plane can be used.

S RPM should be called out as a positive number. It is not necessary to start the spindle in the correct direction; the control does this automatically.

F7.54: G195/G196 Live Tooling Rigid Tapping: [1] Rapid, [2] Feed, [3] Start or end of stroke, [4] Starting point, [5] Part surface, [6] Bottom of the hole, [7] Centerline.

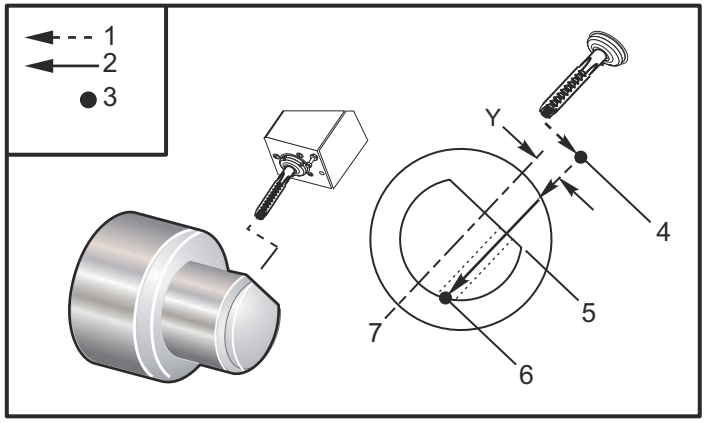


```
o61951 (G195 LIVE RADIAL TAPPING) ;
(G54 X0 Y0 is at the center of rotation) ;
(Z0 is on the face of the part) ;
(T1 is a tap) ;
(BEGIN PREPARATION BLOCKS) ;
T101 (Select tool and offset 1) ;
G00 G18 G20 G40 G80 G99 (Safe startup) ;
G00 G54 X3.25 Z-0.75 C0. (Start Point) ;
```

```
M08 (coolant on) ;
(BEGIN CUTTING BLOCK) ;
S500 (Select tap RPM) ;
G195 X2. F0.05 (Taps to X2., bottom of hole) ;
G00 C180. (Index C-Axis) ;
G00 C270. Y-1. Z-1. (Index C-Axis, YZ-axis positioning) ;
G80 (Cancel Canned Cycle);
(BEGIN COMPLETION BLOCKS) ;
G00 Z0.25 M09 (Rapid retract, coolant off) ;
G53 X0 Y0 (X & Y home) ;
G53 Z0 (Z home) ;
M30 (End program) ;
```

G198 Disengage Synchronous Spindle Control (Group 00)

G198 disengages synchronous spindle control and allows independent control of the main spindle and the secondary spindle.

G199 Engage Synchronous Spindle Control (Group 00)

***R** - Degrees, phase relationship of following spindle to commanded spindle

* indicates optional

This G code synchronizes the RPM of the two spindles. Position or speed commands to the following spindle, usually the secondary spindle, are ignored when spindles are in synchronous control. However, M codes on the two spindles are controlled independently.

The spindles remain synchronized until synchronous mode is disengaged using G198. This is the case even if power is cycled.

An R value on the G199 block positions the following spindle to a specified number of degrees, relative to the 0 mark on the commanded spindle. Examples of R values in G199 blocks:

```
G199 R0.0 (The following spindle’s origin, 0-mark, matches the
commanded spindle’s origin, 0-mark) ;
G199 R30.0 (The following spindle’s origin, 0-mark, is
positioned +30 degrees from the commanded spindle’s origin,
0-mark) ;
G199 R-30.0 (The following spindle’s origin, 0-mark, is
positioned -30 degrees from the commanded spindle’s origin,
0-mark) ;
```

When an R value is specified on the G199 block, the control first matches the velocity on the following spindle to that of the commanded spindle, then adjusts the orientation (R value in the G199 block). Once the specified R orientation is achieved the spindles are locked in synchronous mode until disengaged with a G198 command. This can also be achieved at zero RPM. Refer also to the G199 portion of the Synchronized Spindle Control Display on **228**.

```
%
o61991 (G199 SYNC SPINDLES) ;
(G54 X0 Y0 is at the center of rotation) ;
(Z0 is on the face of the part) ;

(BEGIN PREPARATION BLOCKS) ;
T101 (Select tool and offset 1) ;
G00 G20 G40 G80 G99 (Safe startup) ;

G00 G54 X2.1 Z0.5 ;
G98 M08 (Feed per min, turn coolant on) ;


(BEGIN CUTTING BLOCKS) ;
G01 Z-2.935 F60. (Linear feed) ;
M12 (Air blast on) ;
M110 (Secondary spindle chuck clamp) ;
M143 P500 (Secondary spindle to 500 RPM) ;
G97 M04 S500 (Main spindle to 500 RPM) ;
G99 (Feed per rev) ;
M111 (Secondary spindle chuck unclamp) ;
M13 (Air blast off) ;
M05 (main spindle off) ;
M145 (Secondary spindle off) ;
G199 (Synch spindles) ;

G00 B-28. (Rapid secondary spindle to face of part) ;
G04 P0.5 (Dwell for .5 sec) ;
G00 B-29.25 (Feed secondary spindle onto part) ;
M110 (secondary spindle chuck clamp) ;
G04 P0.3 (Dwell for .3 sec) ;
M08 (Turn coolant on) ;
G97 S500 M03 (Turn spindle on at 500 RPM, CSS off) ;
G96 S400 (CSS on, RPM is 400) ;
G01 X1.35 F0.0045 (Linear feed) ;
X-.05 (Linear feed) ;
G00 X2.1 M09 (Rapid retract) ;
G00 B-28. (Rapid secondary spindle to face of part) ;
G198 (Synch spindle off) ;
```

```
M05 (Turn off main spindle) ;
G00 G53 B-13.0 (Secondary spindle to cut position);
G00 G53 X-1. Y0 Z-11. (Rapid to 1st position) ;
(*******second side of part********)
G55 G99 (G55 for secondary spindle work offset) ;
G00 G53 B-13.0 ;
G53 G00 X-1. Y0 Z-11. ;
G14 ;
T101 (Select tool and offset 1) ;
G50 S2000 (limit spindle to 1000 RPM);
G97 S1300 M03 ( ;
G00 X2.1 Z0.5 ;
Z0.1 M08 ;
G96 S900 ;
G01 Z0 F0.01 ;
X-0.06 F0.005 ;
G00 X1.8 Z0.03 ;
G01 Z0.005 F0.01 ;
X1.8587 Z0 F0.005 ;
G03 X1.93 Z-0.0356 K-0.0356 ;
G01 X1.935 Z-0.35 ;
G00 X2.1 Z0.5 M09 ;
G97 S500 ;
G15 ;
G53 G00 X-1. Y0 Z-11. ;

(BEGIN COMPLETION BLOCKS) ;
G00 G53 X0 M09 (X home) ;
G53 Z0 (Z home) ;
G28 H0. (Unwind C-Axis) ;
M30 (End program) ;
%
```

G200 Index on the Fly (Group 00)

U - Optional relative move in X to tool change position
W - Optional relative move in Z to tool change position
X - Optional final X position
Z - Optional final Z position
T - Required tool number and offset number in standard form

`G200` Index on the Fly causes the lathe to perform a move away, change tools, and move back to the part, to save time.

CAUTION: *The G200 does speed things up, but it also requires you to be more careful. Make sure you proof the program well, at 5% rapid, and be very cautious if you are starting from the middle of the program.*

Normally, your tool change line consists of a few lines of code, like:

```
G53 G00 X0. (BRING TURRET TO SAFE X TC POS) ;
G53 G00 Z-10. (BRING TURRET TO SAFE Z TC POS) ;
T202 ;
```

Using `G200`, changes this code to:

```
G200 T202 U.5 W.5 X8. Z2. ;
```

If `T101` just finished turning the O.D. of the part, you don't need to go back to a safe tool change position, when using a G200. Instead (as in the example) the moment the G200 line is called the turret:

1. Unclamps, in its current position.
2. Moves incrementally in the X and Z axes by the values stated in `U` and `W` (`U.5 W.5`)
3. Completes the tool change at this position.
4. Using the new tool and work offsets, it rapids to the XZ position called out on the `G200` line (`X8. Z2.`).

This all happens very quickly, and nearly all at the same time, so try it out a few times, away from the chuck.

When the turret unclamps, it moves towards the spindle a tiny amount (perhaps .1-.2"), so you do not want the tool directly up against your jaws or collet when the `G200` is commanded.

Because the `U` and `W` moves are incremental distances from where the tool is currently, if you hand jog away and start your program in a new position, the turret moves up and to the right of that new position. In other words, if you manually jogged back within .5" of your tailstock, and then commanded `G200 T202 U.5 W1. X1. Z1.`, the turret would hit your tailstock - moving an incremental W1. (1" to right). For this reason, you may want to setup your Setting 93 and Setting 94, Tailstock Restricted Zone.

Information on this can be found on page **145**.

G211 Manual Tool Setting / G212 Auto Tool Setting

T - Tool number. May be entered as `Tnn` or `Tnnnn`.
H - Tool tip direction. `H-5` will approach the probe from the X (-) side and `H5` from the X (+) side.
***K** - Indicates a calibration cycle. (Values 1 or 2)
***M** - Tool breakage tolerance value.
***C** - Drill diameter value. Only valid with tip directions 5-8. Offset will be adjusted by half this amount (i.e. the program assumes a 90-degree drill point).
***X** - Adjust the approach and start points of a probing cycle.
***Z** - Adjust the approach and start points of a probing cycle.
***B** - Allows the user to use a different amount to move the tool the tool in X or Z while probing (from the start point to in position over the probe). Default value is 6mm.
***U** - Adjust the X start point on `H1 - 4`.
***W** - Adjust the Z start point on `H1 - 4`.

*indicates optional

NOTE: *The `G211` code requires a `Tnnn` code, either directly before the `G211`line, or on the same line. `The G211` code also requires an `Hnnn` code. The `G212` code only requires an `Hnnn` code on the same line but a `Tnnn` code tool call is required prior.*

Using G211 Manual Tool Setting

IMPORTANT: *The Automatic Tool Probe must be calibrated before using `G211 / G212`.*

The `G211` code is used to set an initial tool offset (X, Z or both). To use the probe arm must be lowered. Then the tool tip jogged into place about 0.25 in from the corner of the problem that corresponds to the desired tip direction. The code will either use the current tool offset if one has been called previously or the tool offset may be chosen using a `T` code. The cycle will probe the tool, enter the offset and return the tool to the start position.

Using G212 Auto Tool Setting

The `G212` code is used to re-probe a tool that already has an offset set, such after an insert is changed. It can be also be used to check for tool breakage. The tool will be moved from any location into proper orientation to the probe by the `G212` command. This path is determined by the tool tip direction variable `H`, this variable must be correct or the tool may crash.

IMPORTANT: *Care must be used for touching off any back working tools, to keep from hitting the spindle or the back wall of the machine. A tool and offset must be called **Tnnn** before running `G212`, or an alarm will be generated.*

G212 code is used to re-probe a tool that already has an offset set, such after an insert is changed. It can be also be used to check for tool breakage. The tool will be moved from any location into proper orientation to the probe by the G212 command. This path is determined by the tool tip direction variable H and it must be correct or the tool may crash.

IMPORTANT: *Care must be used for touching off any back working tools, to keep from hitting the spindle or the back wall of the machine. A tool and offset must be called Tnnn before running G212, or an alarm will be generated.*

G241 Radial Drill Canned Cycle (Group 09)

C - C-Axis absolute motion command
F - Feed Rate
R - Position of the R plane (diameter)
X - Position of bottom of hole (diameter)
***Y** - Y-axis absolute motion command
***Z** - Z-axis absolute motion command

* indicates optional

F7.55: G241 Radial Drill Canned Cycle: [1] Rapid, [2] Feed, [3] Start or end of stroke, [4] Starting point, [5] R plane, [6] Part surface, [Z] Bottom of the hole, [8] Centerline.

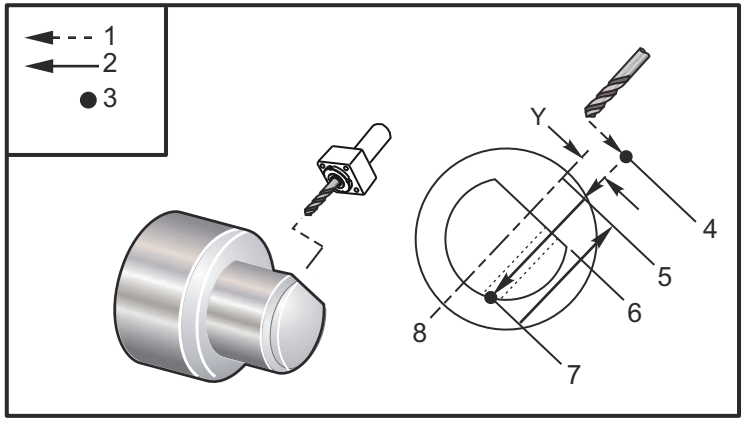


```
%
o62411 (G241 RADIAL DRILLING) ;
(G54 X0 Y0 is at the center of rotation) ;
(Z0 is on the face of the part) ;
(T1 is a drill) ;
(BEGIN PREPARATION BLOCKS) ;
T101 (Select tool and offset 1) ;
G00 G18 G20 G40 G80 G99 (Safe startup) ;
G98 (Feed per min) ;
G00 G54 X5. Z-0.75 (Rapid to 1st position) ;
```

```
P1500 M133 (Live tool CW at 1500 RPM) ;
M08 (Coolant on) ;
(BEGIN CUTTING BLOCKS) ;
G241 X2.1 Y0.125 Z-1.3 C35. R4. F20. (Begin G241) ;
X1.85 Y-0.255 Z-0.865 C-75. (next position) ;
(BEGIN COMPLETION BLOCKS) ;
G00 Z1. M09 (Rapid retract, coolant off) ;
M135 (Live tool off) ;
G53 X0 Y0 (X & Y Home) ;
G53 Z0 (Z Home) ;
M30 (End program) ;
%
```

G242 Radial Spot Drill Canned Cycle (Group 09)

C - C-Axis absolute motion command
F - Feed Rate
P - The dwell time at the bottom of the hole
R - Position of the R plane (Diameter)
X - Position of bottom of hole (Diameter)
***Y** - Y-axis motion command
***Z** - Z-axis motion command

* indicates optional

This G code is modal. It remains active until it is canceled (`G80`) or another canned cycle is selected. Once activated, every motion of `Y` and/or `Z` executes this canned cycle.

NOTE: *The P values are modal. This means if you are in the middle of a canned cycle and a `G04 Pnn` or an `M97 Pnn` is used the P value will be used for the dwell / subprogram as well as the canned cycle.*

F7.56: G242 Radial Spot Drill Canned Cycle: [1] Rapid, [2] Feed, [3] Starting point, [4] R plane, [5] Part surface, [6] Dwell at the bottom of the hole, [7] Centerline.

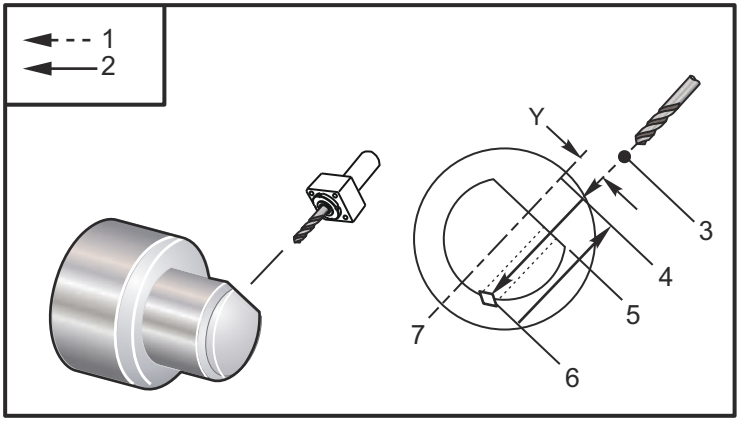


```
%
o62421 (G242 RADIAL SPOT DRILL) ;
(G54 X0 Y0 is at the center of rotation) ;
(Z0 is on the face of the part) ;
(T1 is a spot drill) ;
(BEGIN PREPARATION BLOCKS) ;
T101 (Select tool and offset 1) ;
G00 G18 G20 G40 G80 G99 (Safe startup) ;
G98 (Feed per min) ;
G00 G54 X5. Y0.125 Z-1.3 (Rapid to 1st position) ;
P1500 M133 (Live tool CW at 1500 RPM) ;
M08 (Coolant on) ;
(BEGIN CUTTING BLOCKS) ;
G241 X2.1 Y0.125 Z-1.3 C35. R4. P0.5 F20. ;
(Drill to X2.1) ;
X1.85 Y-0.255 Z-0.865 C-75. P0.7 (next position) ;
(BEGIN COMPLETION BLOCKS) ;
G00 Z1. M09 (Rapid retract, coolant off) ;
M135 (Live tool off) ;
G53 X0 Y0 (X & Y Home) ;
G53 Z0 (Z Home) ;
M30 (End program) ;
%
```

G243 Radial Normal Peck Drilling Canned Cycle (Group 09)

C - C-Axis absolute motion command
F - Feed Rate
***I** - Size of first cutting depth
***J** - Amount to reduce cutting depth each pass
***K** - Minimum depth of cut
***P** - The dwell time at the bottom of the hole
***Q** - The cut-in value, always incremental
R - Position of the R plane (Diameter)
X - Position of bottom of hole (Diameter)
***Y** - Y-axis absolute motion command
***Z** - Z-axis absolute motion command

* indicates optional

NOTE: *The P values are modal. This means if you are in the middle of a canned cycle and a* `G04 Pnn` *or an* `M97 Pnn` *is used the P value will be used for the dwell / subprogram as well as the canned cycle.*

F7.57: `G243` Radial Normal Peck Drilling Canned Cycle: [1] Rapid, [2] Feed, [3] Start or end of stroke, [4] R plane, [#52] Setting 52, [5] R plane, [6] Part surface, [#22] Setting 22, [7] Dwell at the bottom of the hole, [8] Centerline.

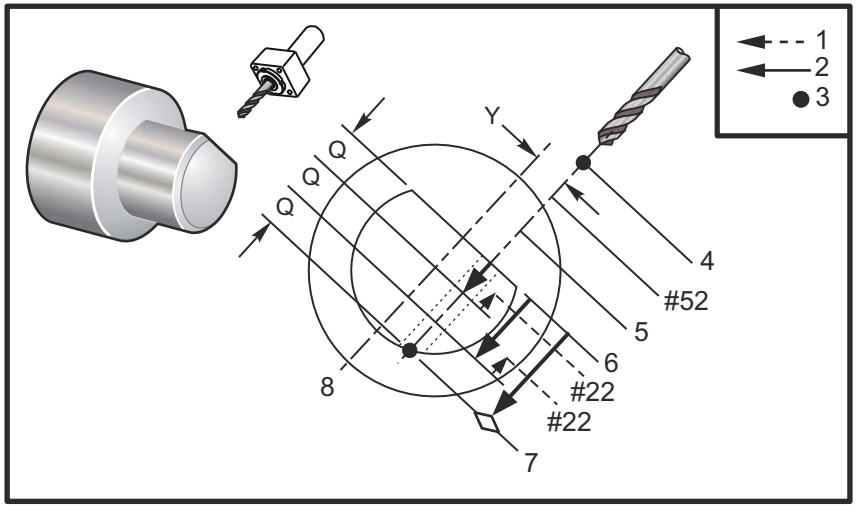

Programming Notes: If `I`, `J`, and `K` are specified, a different operating mode is selected.The first pass will cut in the value of `I`, each succeeding cut will be reduced by amount J, and the minimum cutting depth is `K`. Do not use a `Q` value when programming with `I`,`J`, and `K`.

Setting 52 changes the way G243 works when it returns to the R plane. Usually the R plane is set well outside the cut to insure that the chip clearing motion allows the chips to clear the hole. However, this is wasted motion when first drilling through this empty space. If Setting 52 is set to the distance required to clear chips, the R plane can be put much closer to the part being drilled. When the clear move to R occurs, the Z will be moved past R by this value in setting 52. Setting 22 is the amount to feed in X to get back the same point at which the retraction occurred.

```
%
o62431 (G243 RADIAL PECK DRILL CYCLE) ;
(G54 X0 Y0 is at the center of rotation) ;
(Z0 is on the face of the part) ;
(T1 is a drill) ;
(BEGIN PREPARATION BLOCKS) ;
T101 (Select tool and offset 1) ;
G00 G18 G20 G40 G80 G99 (Safe startup) ;
G98 (Feed per min) ;
G00 G54 X5. Y0.125 Z-1.3 (Rapid to 1st position) ;
P1500 M133 (Live tool CW at 1500 RPM) ;
M08 (Coolant on) ;
G243 X2.1 Y0.125 Z-1.3 C35. R4. Q0.25 F20. ;
(Drill to X2.1) ;
X1.85 Y-0.255 Z-0.865 C-75. Q0.25 (Next position);
G00 Z1. (Rapid retract) ;
M135 (Live tool off) ;
G00 G53 X0 M09(X home, coolant off)  ;
G53 Z0 ;
M00 ;
(G243 - RADIAL WITH I,J,K PECK DRILLING) ;
G00 G54 X5. Y0.125 Z-1.3 (Rapid to 1st position) ;
P1500 M133 (Live tool CW - 1500 RPM) ;
M08 (Coolant on) ;
G243 X2.1 Y0.125 Z-1.3 I0.25 J0.05 K0.1 C35. R4. F5. ;
(Drill to X2.1) ;
X1.85 Y-0.255 Z-0.865 I0.25 J0.05 K0.1 C-75. ;
(next position) ;
(BEGIN COMPLETION BLOCKS) ;
M135 (Turn live tool off) ;
G00 G53 X0 Y0 M09 (X & Y home, coolant off) ;
G53 Z0 (Z home) ;
M30 (End program) ;
%
```

G245 Radial Boring Canned Cycle (Group 09)

C - C-Axis absolute motion command
F - Feed Rate
R - Position of the **R** plane (Diameter)
X - Position of bottom of hole (Diameter)
***Y** - Y-axis absolute motion command
***Z** - Z-axis absolute motion command

* indicates optional

F7.58: G245 Radial Boring Canned Cycle: [1] Rapid, [2] Feed, [3] Start or end of stroke, [4] Starting point, [5] R plane, [6] Part surface, [Z] Bottom of the hole, [8] Centerline.

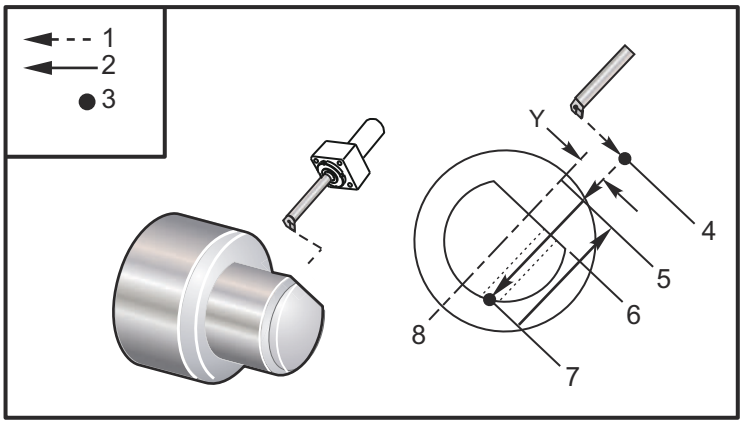


```
%
o62451 (G245 RADIAL BORING) ;
(G54 X0 Y0 is at the center of rotation) ;
(Z0 is on the face of the part) ;
(T1 is a boring tool) ;
(BEGIN PREPARATION BLOCKS) ;
T101 (Select tool and offset 1) ;
G00 G18 G20 G40 G80 G99 (Safe startup) ;
G98 (Feed per min) ;
G00 G54 X5. Y0.125 Z-1.3 (Rapid to 1st position) ;
P500 M133 (Live tool CW at 500 RPM) ;
M08 (Coolant on) ;
(BEGIN CUTTING BLOCKS) ;
G245 X2.1 Y0.125 Z-1.3 C35. R4. F20. ;
(Bore to X2.1) ;
X1.85 Y-0.255 Z-0.865 C-75. (next position) ;
(BEGIN COMPLETION BLOCKS) ;
G00 Z1. M09 (Rapid retract, coolant off) ;
M135 (live tool off) ;
G53 X0 Y0 (X & Y home) ;
```

```
G53 Z0 (Z home) ;
M30 (End program) ;
%
```

G246 Radial Bore and Stop Canned Cycle (Group 09)

C - C-Axis absolute motion command
F - Feed Rate
R - Position of the R plane (Diameter)
X - Position of bottom of hole (Diameter)
***Y** - Y-axis absolute motion command
***Z** - Z-axis absolute motion command

*indicates optional

This G code stops the spindle once the tool reaches the bottom of the hole. The tool is retracted once the spindle has stopped.

```
%
o62461 (G246 RADIAL BORE AND STOP) ;
(G54 X0 Y0 is at the center of rotation) ;
(Z0 is on the face of the part) ;
(T1 is a boring tool) ;
(BEGIN PREPARATION BLOCKS) ;
T101 (Select tool and offset 1) ;
G00 G18 G20 G40 G80 G99 (Safe startup) ;
G98 (Feed per min) ;
G00 G54 X5. Y0.125 Z-1.3 (Rapid to 1st position) ;
P500 M133 (Live tool CW at 500 RPM) ;
M08 (Coolant on) ;
(BEGIN CUTTING BLOCKS) ;
G246 X2.1 Y0.125 Z-1.3 C35. R4. F20. ;
(Bore to X2.1) ;
X1.85 Y-0.255 Z-0.865 C-75. (next position) ;
(BEGIN COMPLETION BLOCKS) ;
G00 Z1. M09 (Rapid retract, coolant off) ;
M135 (Live tool off) ;
G53 X0 Y0 (X & Y Home) ;
G53 Z0 (Z Home) ;
M30 (End program) ;
%
```

G247 Radial Bore and Manual Retract Canned Cycle (Group 09)

C - C-Axis absolute motion command
F - Feed Rate
R - Position of the R plane (Diameter)
***X** - Position of bottom of hole (Diameter)
***Y** - Y-axis absolute motion command
***Z** - Z-axis absolute motion command

* indicates optional

This G code stops the spindle at the bottom of the hole. At this point the tool is manually jogged out of the hole. The program continues when **[CYCLE START]** is pressed.

```
%
o62471 (G247 RADIAL BORE AND MANUAL RETRACT) ;
(G54 X0 Y0 is at the center of rotation) ;
(Z0 is on the face of the part) ;
(T1 is a boring tool) ;
(BEGIN PREPARATION BLOCKS) ;
T101 (Select tool and offset 1) ;
G00 G18 G20 G40 G80 G99 (Safe startup) ;
G98 (Feed per minute) ;
G00 G54 X5. Y0.125 Z-1.3 (Rapid to 1st position) ;
P500 M133 (Live tool CW at 500 RPM) ;
M08 (coolant on) ;
(BEGIN CUTTING BLOCKS) ;
G247 X2.1 Y0.125 Z-1.3 C35. R4. F20. ;
(Bore to X2.1) ;
X1.85 Y-0.255 Z-0.865 C-75. (next position) ;
(BEGIN COMPLETION BLOCKS) ;
G00 Z1. M09 (Rapid retract, Coolant off) ;
M135 (Live tool off) ;
G53 X0 Y0 (X & Y Home) ;
G53 Z0 (Z Home) ;
M30 (End program) ;
%
```

G248 Radial Bore and Dwell and Manual Retract Canned Cycle (Group 09)

C - C-Axis absolute motion command
F - Feed Rate
P - The dwell time at the bottom of the hole
R - Position of the R plane (Diameter)
***X** - Position of bottom of hole (Diameter)
***Y** - Y-axis absolute motion command
***Z** - Z-axis absolute motion command

* indicates optional

This G code stops the tool at the bottom of the hole, and dwells with the tool turning for the time designated with the P value. At this point the tool is manually jogged out of the hole. The program continues when **[CYCLE START]** is pressed.

```
%
o62481 (G248 RADIAL BORE, DWELL, MANUAL RETRACT) ;
(G54 X0 Y0 is at the center of rotation) ;
(Z0 is on the face of the part) ;
(T1 is a boring tool) ;
(BEGIN PREPARATION BLOCKS) ;
T101 (Select tool and offset 1) ;
G00 G18 G20 G40 G80 G99 (Safe startup) ;
G98 (Feed per minute) ;
G00 G54 X5. Y0.125 Z-1.3 (Rapid to 1st position) ;
P500 M133 (Live tool CW at 500 RPM) ;
M08 (coolant on) ;
(BEGIN CUTTING BLOCKS) ;
G248 X2.1 Y0.125 Z-1.3 C35. R4. P1. F20. ;
(Bore to X2.1) ;
X1.85 Y-0.255 Z-0.865 C-75. (next position) ;
(BEGIN COMPLETION BLOCKS) ;
G00 Z1. M09 (Rapid retract, coolant off) ;
M135 (Live tool off) ;
G53 X0 Y0 (X & Y Home) ;
G53 Z0 (Z Home) ;
M30 (End program) ;
%
```

G249 Radial Bore and Dwell Canned Cycle (Group 09)

C - C-Axis absolute motion command
F - Feed Rate
P - The dwell time at the bottom of the hole
R - Position of the R plane
X - Position of bottom of hole
***Y** - Y-axis motion command
*Z - Z-axis motion command

* indicates optional

NOTE: *The P values are modal. This means if you are in the middle of a canned cycle and a* `G04 Pnn` *or an* `M97 Pnn` *is used the P value will be used for the dwell / subprogram as well as the canned cycle.*

F7.59: `G249` Radial Bore and Dwell Canned Cycle: [1] Rapid, [2] Feed, [3] Starting point, [4] R plane, [5] Part surface, [6] Dwell at the bottom of the hole, [7] Centerline.

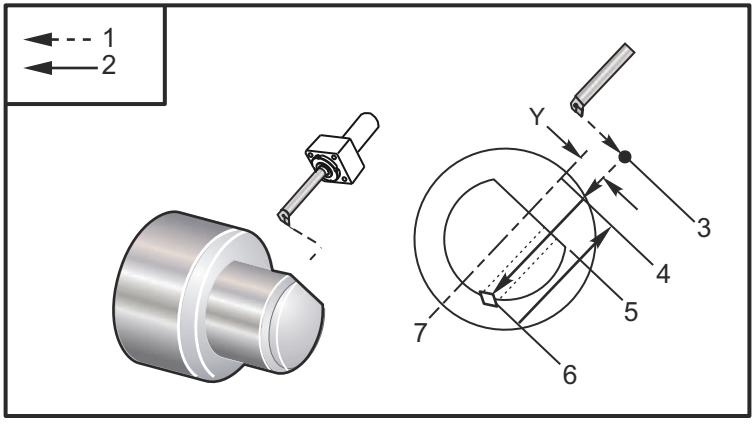


```
%
o62491 (G249 RADIAL BORE AND DWELL) ;
(G54 X0 Y0 is at the center of rotation) ;
(Z0 is on the face of the part) ;
(T1 is a boring tool) ;
(BEGIN PREPARATION BLOCKS) ;
T101 (Select tool and offset 1) ;
G00 G18 G20 G40 G80 G99 (Safe startup) ;
G98 (Feed per minute) ;
G00 G54 X5. Y0.125 Z-1.3 (Rapid to 1st position) ;
P500 M133 (Live tool CW at 500 RPM) ;
M08 (coolant on) ;
(BEGIN CUTTING BLOCKS) ;
```

```
G249 X2.1 Y0.125 Z-1.3 C35. R4. P1.35 F20. ;
(Bore to X2.1) ;
X1.85 Y-0.255 Z-0.865 C-75. P1.65 (next position) ;
(BEGIN COMPLETION BLOCKS) ;
G00 Z1. M09 (Rapid retract, Coolant off) ;
M135 (Live tool off) ;
G53 X0 Y0 (X & Y home) ;
G53 Z0 (Z home) ;
M30 (End program) ;
%
```

G266 Visible Axes Linear Rapid %Motion (Group 00)

E - Rapid rate.
P - Axis parameter number. Example P1 = X, P2 = Y, P3 = Z.
I - Machine coordinate position command.

The below example commands the X-axis to move to X-1. at 10% rapid rate.

```
%
G266 E10. P1 I-1
%
```

To use the bar feeder pushrod as a stop. The example below is commanding the bar feeder axis to move to -10. From home (left side) @ 10% rapid rate.

```
%
G266 E10. P13 I-10.
%
```

To load the pushrod, select **[RECOVER]** then there is an option to load the pushrod.

NOTE: *Make sure to retract the pushrod before machining.*

7.2 More Information Online

For updated and supplemental information, including tips, tricks, maintenance procedures, and more, visit the Haas Service page at www.HaasCNC.com. You can also scan the code below with your mobile device to go directly to the Haas Service page:

Chapter 8: M-codes

8.1 Introduction

This chapter gives detailed descriptions of the M-codes that you use to program your machine.

8.1.1 List of M-codes

CAUTION: *The sample programs in this manual have been tested for accuracy, but they are for illustrative purposes only. The programs do not define tools, offsets, or materials. They do not describe workholding or other fixturing. If you choose to run a sample program on your machine, do so in Graphics mode. Always follow safe machining practices when you run an unfamiliar program.*

NOTE: *The sample programs in this manual represent a very conservative programming style. The samples are intended to demonstrate safe and reliable programs, and they are not necessarily the fastest or most efficient way to operate a machine. The sample programs use G-codes that you might choose not to use in more efficient programs.*

M-codes are miscellaneous machine commands that do not command axis motion. The format for an M-code is the letter M followed by two to three digits; for example `M03`.

Only one M-code is allowed per line of code. All M-codes take effect at the end of the block.

Code	Description	Page
`M00`	Stop Program	**394**
`M01`	Stop Program	**394**
`M02`	Program End	**394**
`M03`	Spindle On Fwd	**395**
`M04`	Spindle On Rev	**395**

Code	Description	Page
M05	Spindle Stop	**395**
M08 / M09	Coolant On / Off	**395**
M10 / M11	Chuck Clamp / Unclamp	**395**
M12 / M13	Auto Jet Air Blast On / Off (Optional)	**395**
M14 / M15	Main Spindle Brake On /Off (Optional C-Axis)	**396**
M17	Turret Rotation Fwd	**396**
M18	Turret Rotation Rev	**396**
M19	Orient Spindle (Optional)	**396**
M21	Tailstock Advance (Optional)	**397**
M22	Tailstock Retract (Optional)	**397**
M23	Chamfer Out of Thread On	**397**
M24	Chamfer Out of Thread Off	**397**
M30	End of Program and Reset	**397**
M31	Chip Auger Forward (Optional)	**398**
M33	Chip Auger Stop (Optional)	**398**
M35	Parts Catcher Part-Off Position	**398**
M36	Parts Catcher On (Optional)	**398**
M37	Parts Catcher Off (Optional)	**398**
M38 / M39	Spindle Speed Variation On / Off	**398**
M41 / M42	Low / High Gear (Optional)	**399**
M43	Turret Unlock (Service Use Only)	**399**
M44	Turret Lock (Service Use Only)	**399**
M51 - M56	Turn On Built-In M-Code Relay	**399**

Code	Description	Page
M59	Turn On Output Relay	**400**
M61 - M66	M61 - M66 Turn Off Built-In M-Code Relay	**400**
M69	Turn Off Output Relay	**400**
M78	Alarm if Skip Signal Found	**401**
M79	Alarm if Skip Signal Not Found	**401**
M85 / M86	Automatic Door Open / Close (Optional)	**401**
M88 / M89	High Pressure Coolant On / Off (Optional)	**402**
M90 / M91	Fixture Clamp Input On / Off	**402**
M95	Sleep Mode	**402**
M96	Jump If No Signal	**402**
M97	Local Subprogram Call	**403**
M98	Subprogram Call	**403**
M99	Subprogram Return Or Loop	**404**
M104 / M105	Probe Arm Extend / Retract (Optional)	**405**
M109	Interactive User Input	**405**
M110	Secondary Spindle Chuck Clamp (Optional)	**395**
M111	Secondary Spindle Chuck Unclamp (Optional)	**395**
M112 / M113	Secondary Spindle Air Blast On / Off (Optional)	**408**
M114 / M115	Secondary Spindle Brake On / Off (Optional)	**408**
M119	Secondary Spindle Orient (Optional)	**408**
M121- M126	M121 - M126 Built-In M-Codes Relays with M-Fin	**408**
M129	Turn On M-Code Relay with M-Fin	**409**
M130 / M131	Display Media / Cancel Display Media	**409**

Code	Description	Page
M133	Live Tool Fwd (Optional)	**410**
M134	Live Tool Rev (Optional)	**410**
M135	Live Tool Stop (Optional)	**410**
M138	Spindle Speed Variation On	**411**
M139	Spindle Speed Variation Off	**411**
M143	Secondary Spindle Forward (Optional)	**411**
M144	Secondary Spindle Reverse (Optional)	**411**
M145	Secondary Spindle Stop (Optional)	**411**
M146 / M147	Steady Rest Clamp / Unclamp (Optional)	**411**
M158 / M159	Mist Condenser On/Off	**411**
M219	Live Tool Orient (Optional)	**412**

M00 Stop Program

The M00 code stops a program. It stops the axes, spindle, and turns off the coolant (including optional Through Spindle Coolant, Through Tool Air Blast, and Auto Air Gun / Minimum Quantity Lubrication). The next block after the M00 is highlighted when viewed in the program editor. Press **[CYCLE START]** to continue program operation from the highlighted block.

M01 Optional Program Stop

M01 works the same as M00, except the optional stop feature must be on. Press **[OPTION STOP]** to toggle the feature on and off.

M02 Program End

M02 ends a program.

NOTE: *The most common way of ending a program is with an M30.*

M03 / M04 / M05 Spindle On Fwd/On Rev/Stop

M03 turns spindle on in the forward direction. M04 turns spindle on in the reverse direction. M05 stops the spindle. For spindle speed, refer to G96/G97/G50.

M08 Coolant On / M09 Coolant Off

P - M08 Pn

M08 turns on the optional coolant supply and M09 turns it off. For High Pressure Coolant, see M88/M89.

An optional P-Code can now be specified along with an M08.

NOTE: *The machine is equipped with a Variable Frequency Drive for the coolant pump*

As long as no other G-Codes are in the same block, and t, this P-Code can be used to specify the desired pressure level of the coolant pump: P0 = Low Pressure P1 = Normal Pressure P2 = High Pressure

NOTE: *If no P-Code is specified or the specified P-Code is out of range, then normal pressure will be used.*

NOTE: *If the machine is not equipped with a Variable Frequency Drive for the coolant pump, then the P-Code will have no effect.*

M10 Chuck Clamp / M11 Unclamp

M10 clamps the chuck and M11 unclamps it.

The direction of clamping is controlled by Setting 282 (refer to page**451** for more information).

M12 / M13 Auto Jet Air Blast On/Off (Optional)

M12 and M13 activate the optional Auto Air Jet. M12 turns the air blast on and M13 turns the air blast off. M12 Srrr Pnnn (rrr in RPM and nnn is in milliseconds) turns the air blast on for the specified time, rotates the spindle at the specified speed while the air blast is on, then turns off both the spindle and the air blast automatically. The air blast command for the secondary spindle is M112/M113.

M14 / M15 Main Spindle Brake On/Off (Optional C-Axis)

These M Codes are used for machines equipped with the optional C-Axis. M14 applies a caliper-style brake to hold the main spindle, while M15 releases the brake.

M17 / M18 Turret Rotation Fwd/Rev

M17 and M18 rotate the turret in the forward (M17) or reverse (M18) direction when a tool change is made. The following M17 program code causes the tool turret to move forward to tool 1 or reverse to tool 1 if an M18 is commanded.

```
N1 T0101 M17 (Forward) ;

N1 T0101 M18 (Reverse) ;
```

An M17 or M18 stays in effect for the remainder of the program.

NOTE: *Setting 97, Tool Change Direction, must be set to M17/M18.*

M19 Orient Spindle (Optional)

M19 adjusts the spindle to a fixed position. The spindle only orients to the zero position without the optional M19 orient spindle feature.

The orient spindle function allows P and R address codes. For example, M19 P270. orients the spindle to 270 degrees. The R value allows the programmer to specify up to two decimal places; for example, M19 R123.45. View the angle in the **Current Commands Tool Load** screen.

M119 positions the secondary spindle (DS lathes) the same way.

NOTE: *The range for M19 or M119 is 0 to 360 degrees. If a negative value if given, it will be ignored and spindle will orient to 0 degrees.*

Spindle orientation is dependent on the mass, diameter, and length of the workpiece and/or the workholding (chuck). Contact the Haas Applications Department if any unusually heavy, large diameter, or long configuration is used.

M21 / M22 Tailstock Advance/Retract (Optional)

M21 and M22 position the tailstock. M21 uses Settings 341and 342 to move to the Tailstock Advance DistanceM22 uses Setting 105 to move the tailstock to the Retract Point.

NOTE: *ST10 does not use any settings (105, 341, 342).*

Adjust pressure using the valves on the HPU (except ST-40, which uses Setting 241 to define hold pressure). For information on proper ST tailstock pressure, refer to pages **142** and **143**.

CAUTION: *Do not use an M21 in the program if the tailstock is positioned manually. If this is done, the tailstock backs away from the workpiece and then repositions against the workpiece, which may cause the workpiece to drop.*

F8.1: Set Screw Hold Pressure Valve: [1] Locking knob, [2] Adjustment knob.

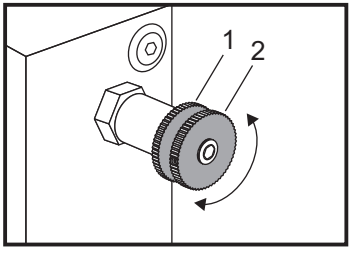

M23 / M24 Chamfer Out of Thread On/Off

M23 commands the control to execute a chamfer at the end of a thread executed by G76 or G92. M24 commands the control not to perform chamfering at the end of the threading cycles (G76 or G92). An M23 remains in effect until changed by M24, likewise for M24. Refer to Settings 95 and 96 to control the chamfer size and angle. M23 is the default at power-up and when the control is reset.

M30 Program End and Reset

M30 stops a program. It stops the spindle and turns off the coolant and the program cursor returns to the start of the program.

NOTE: *M30 no longer cancels tool length offsets.*

M31 / M33 Chip Auger Forward/Stop (Optional)

M31 starts the optional chip auger motor in the forward direction (the direction that moves the chips out of the machine). The auger does not turn if the door is open. It is recommended that the chip auger be used intermittently. Continuous operation causes the motor to overheat. Settings 114 and 115 control the auger duty cycle times.

M33 stops auger motion.

M35 Parts Catcher Part-Off Position

The M35 code allows for cycle time savings instead of fully extend/retract the parts catcher for every part, you can command M35 to position the parts catcher to the part-off position. Then when the part is finished command a M36 to catch the part. Then command a M37 to retract the parts catcher to its home position.

This function has been added to the Parts Catcher device page. To access the page press the **[CURRENT COMMANDS]** button then go to the **Devices** tab.

M36 / M37 Parts Catcher On/Off (Optional)

M36 rotates the parts catcher into position to catch a part. M37 rotates the parts catcher out of the work envelope.

NOTE: *The sub-spindle part ejector is a spring loaded manual device that ejects the part when the jaws are opened. The part ejector is not actuated by use of an M-code.*

M38 / M39 Spindle Speed Variation On/Off

Spindle Speed Variation (SSV) allows the operator to specify a range within which the spindle speed continuously varies. This is helpful in suppressing tool chatter, which can lead to an undesirable part finish and/or damage to the cutting tool. The control varies the spindle speed based on Settings 165 and 166. For example, in order to vary spindle speed +/- 50 RPM from its current commanded speed with a duty cycle of 3 seconds, set Setting 165 to 50 and Setting 166 to 30. Using these settings, the following program varies the spindle speed between 950 and 1050 RPM after the M38 command.

M38/39 Program Example

```
%
o60381 (M38/39-SSV-SPINDLE SPEED VARIATION) ;
(G54 X0 Y0 is at the center of rotation) ;
(Z0 is on the face of the part) ;
(BEGIN PREPARATION BLOCKS) ;
```

```
T101 (Select tool and offset 1) ;
G00 G18 G20 G40 G80 G99 (Safe startup) ;
S1000 M3 (Turn spindle CW at 1000 RPM) ;
G04 P3. (Dwell for 3 seconds) ;
M38 (SSV ON) ;
G04 P60. (Dwell for 60 seconds) ;
M39 (SSV OFF) ;
G04 P5. (Dwell for 5 seconds) ;
G00 G53 X0 (X home) ;
G53 Z0 (Z home & C unwind) ;
M30 (End program) ;
%
```

The spindle speed continuously varies with a duty cycle of 3 seconds until an M39 command is found. At that point the machine comes back to its commanded speed and the SSV mode is turned off.

A program stop command such as M30 or pressing **[RESET]** also turns SSV Off. If the RPM swing is larger than the commanded speed value, any negative RPM values (below zero) translates into an equivalent positive value. The spindle, however, is not allowed to go below 10 RPM when SSV mode is active.

Constant Surface Speed: When Constant Surface Speed (G96) is activated (which calculates spindle speed) the M38 command alters that value using Settings 165 and 166.

Threading Operations: G92, G76 and G32 allow the spindle speed to vary in SSV mode. This is not recommended due to possible thread lead errors caused by mismatched acceleration of the spindle and the Z-axis.

Tapping cycles: G84, G184, G194, G195, and G196 are executed at their commanded speed and SSV is not applied.

M41 / M42 Low/High Gear (Optional)

On machines with a transmission, M41 selects low gear and M42 selects high gear.

M43 / M44 Turret Unlock/Lock (Service Use Only)

For Service use only.

M51-M56 Turn On Built-In M-Code Relay

M51 through M56 are used to control M-code relays. Each M-code turns on one relay and leaves it active. UseM61 through M66 to turn these off. **[RESET]** turns off all of these relays.

Refer to M121 through M126 on page **408** for details on the M-code relays.

M59 Turn On Output Relay

P - Discrete output relay number.

M59 turns on a discrete output relay. An example of its usage is M59 Pnnn, where nnn is the relay number being turned on.

When using Macros, M59 P90 does the same thing as using the optional macro command #12090=1, except that it is processed at the end of the line of code.

Built-In M-Code Relays	8M PCB Relay Bank 1 (JP1)	8M PCB Relay Bank 2 (JP2)	8M PCB Relay Bank 3 (JP3)
P114 (M121)	P90	P103	P79
P115 (M122)	P91	P104	P80
P116 (M123)	P92	P105	P81
P113 (M124)	P93	P106	P82
P112 (M125)	P94	P107	P83
P4 (M126)	P95	P108	P84
-	P96	P109	P85
-	P97	P110	P86

M61-M66 Turn Off Built-In M-Code Relay

The M61 through M66 codes are optional for user interfaces. They turn off one of the relays. Use M51-M56 to turn these on. **[RESET]** turns off all of these relays.

See M121-M126 for details on the M-code relays.

M69 Turn Off Output Relay

P - Discrete output relay number from 0 to 255.

M69 turns off a relay. An example of its usage is M69 P12nnn, where nnn is the number of the relay being turned off.

When using Macros, M69 P12003 does the same thing as using the optional macro command #12003=0, except that it is processed in the same order as axis motion.

Built-In M-Code Relays	8M PCB Relay Bank 1 (JP1)	8M PCB Relay Bank 2 (JP2)	8M PCB Relay Bank 3 (JP3)
P114 (M121)	P90	P103	P79
P115 (M122)	P91	P104	P80
P116 (M123)	P92	P105	P81
P113 (M124)	P93	P106	P82
P112 (M125)	P94	P107	P83
P4 (M126)	P95	P108	P84
-	P96	P109	P85
-	P97	P110	P86

M78 / M79 Alarm if Skip Signal Found/Not Found

This M-code is used with a probe. `M78` generates an alarm if a programmed skip function (`G31`) receives a signal from the probe. This is used when a skip signal is not expected, and may indicate a probe crash. `M79` generates an alarm if a programmed skip function (`G31`) did not receive a signal from the probe. This is used when the lack of the skip signal means a probe positioning error. These codes can be placed on the same line as the skip G-code or in any block after.

F8.2: `M78`/`M79` Alarm if Skip Signal Found/Not Found: [1] Signal not found, [2] Signal found.

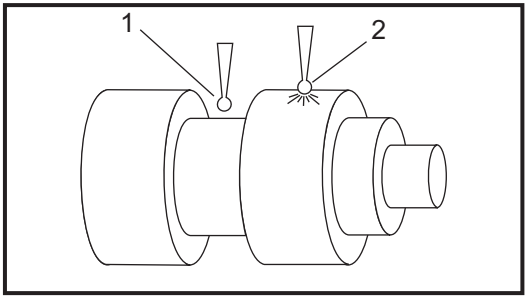

M85 / M86 Automatic Door Open/Close (Optional)

`M85` opens the Auto Door and `M86` closes it. The control pendant beeps when the door is in motion.

M90 Fixture Clamp Input ON / M91 Fixture Clamp Input OFF

The M90 M-code enables fixture clamp input monitoring when setting 276 has a valid input number greater than 0. If variable #709 or #10709 = 1 and the spindle is commanded on, the machine will generate alarm: 973 Fixture Clamp Incomplete.

The M91 M-code disables the fixture clamp input monitoring.

M88 / M89 High Pressure Coolant On/Off (Optional)

M88 turns on the high pressure coolant option, and M89 turns the coolant off. Use M89 to turn off High Pressure coolant during program execution before rotating the tool turret.

DANGER: *Turn off High Pressure Coolant before performing a tool change.*

M95 Sleep Mode

Sleep mode is a long dwell. The format of the M95 command is: M95 (hh:mm).

The comment immediately following M95 must contain the duration, in hours and minutes, that you want the machine to sleep. For example, if the current time were 6 p.m. and you want the machine to sleep until 6:30 a.m. the next day, command M95 (12:30). The line(s) after M95 should be axis moves and spindle warm-up commands.

M96 Jump If No Signal

P - Program block to go to when conditional test is met
Q - Discrete input variable to test (0 to 63)

This code tests a discrete input for 0 (off) status. This is useful for checking the status of automatic work holding or other accessories that generate a signal for the control. The Q value must be in the range 0 to 63, which corresponds to the inputs on the diagnostic display (The upper left input is 0 and the lower right is input 63. When this program block is executed and the input signal specified by Q has a value of 0, the program block Pnnnn is performed (the Pnnnn line must be in the same program).

```
N05 M96 P10 Q8 (Test input #8, Door Switch, until closed) ;
N10 (Start of program loop) ;
. ;
. (Program that machines part) ;
. ;
N85 M21 (Execute an external user function) ;
N90 M96 P10 Q27 (Loop to N10 if spare input [#27] is 0) ;
N95 M30 (If spare input is 1 then end program) ;
```

M97 Local Subprogram Call

This code calls a subprogram (subprogram) referenced by a line number (N) within the same program. A Pnn code is required and must match a line number within the same program. This is useful for subprograms within a program as it does not require a separate program. The subprogram must end with an M99. An Lnn code in the M97 block will repeat the subprogram call nn times.

```
%
O69701 (M97 LOCAL SUBPROGRAM CALL) ;
M97 P1000 L2 (L2 will run the N1000 line twice) ;
M30 ;
N1000 G00 G55 X0 Z0 (N line that will run after M97 P1000 is
run) ;
S500 M03 ;
G00 Z-.5 ;
G01 X.5 F100. ;
G03 ZI-.5 ;
G01 X0 ;
Z1. F50. ;
G28 U0 ;
G28 W0 ;
M99 ;
%
```

M98 Subprogram Call

P - The subprogram number to run
L - Repeats the subprogram call (1-99) times.
(<PATH>) - The Subprogram's directory path

M98 calls a subprogram in the format M98 Pnnnn, where Pnnnn is the number of the program to call, or M98 (<path>/Onnnnn), where <path> is the device path that leads to the subprogram.

The subprogram must contain an M99 to return to the main program. You can add an Lnn count to the M98 block M98 to call the subprogram nn times before continuing to the next block.

When your program calls an M98 subprogram, the control looks for the subprogram in the main program's directory. If the control cannot find the subprogram, it then looks in the location specified in Setting 251. Refer to page **208** for more information. An alarm occurs if the control cannot find the subprogram.

M98 Example:

The subprogram is a separate program (O00100) from the main program (O00002).

```
%
O00002 (PROGRAM NUMBER CALL);
M98 P100 L4 (CALLS O00100 SUB 4 TIMES) ;
M30 ;
%
%
O00100 (SUBPROGRAM);
M00 ;
M99 (RETURN TO MAIN PROGRAM) ;
%


%
O00002 (PATH CALL);
M98 (USB0/O00001.nc) L4 (CALLS O00100 SUB 4 TIMES) ;
M30 ;
%
%
O00100 (SUBPROGRAM);
M00 ;
M99 (RETURN TO MAIN PROGRAM) ;
%
```

M99 Subprogram Return or Loop

This code has three main uses:

1. An `M99` is used at the end of a subprogram, local subprogram, or macro to return back to the main program.
2. An `M99 Pnn` jumps the program to the corresponding `Nnn` in the program.
3. An `M99` in the main program causes the program to loop back to the beginning and run until **[RESET]** is pressed.

Programming Notes - You can simulate Fanuc behavior by using the following code:

	Haas	Fanuc
Calling program:	O0001	O0001
	...	...
	N50 M98 P2	N50 M98 P2

	Haas	Fanuc
	N51 M99 P100	...
	...	N100 (continue here)
	N100 (continue here)	...
	...	M30
	M30	
Subprogram:	O0002	O0002
	M99	M99 P100

`M99` With Macros - If the machine is equipped with the optional macros, you can use a global variable and specify a block to jump to by adding `#nnnnn = dddd` in the subprogram and then using `M99 P#nnnnn` after the subprogram call.

M104 / M105 Probe Arm Extend/Retract (Optional)

The optional tool setting probe arm is extended and retracted using these M-codes.

M109 Interactive User Input

P - A number in the range (500-549) representing the macro variable of the same name.

This M code allows a G-code program to place a short prompt (message) on the screen. A macro variable in the range 500 through 549 must be specified by a `P` code. The program can check for any character that can be entered from the keyboard by comparing with the decimal equivalent of the ASCII character.

T8.1: Values for ASCII Characters

32		space	59	;	semicolon
33	!	exclamation mark	60	<	less than
34	"	double quotation mark	61	=	equals
35	#	number sign	62	>	greater than
36	$	dollar sign	63	?	question mark
37	%	percent sign	64	@	at sign

38	&	ampersand	65-90	A-Z	capitol letters
39	’	closed single quote	91	[	open square bracket
40	(	open parenthesis	92	\	backslash
41	)	close parenthesis	93	]	closed square bracket
42	*	asterisk	94	^	carrot
43	+	plus sign	95	_	underscore
44	,	comma	96	‘	open single quote
45	-	minus sign	97-122	a-z	lowercase letters
46	.	period	123	{	open curly bracket
47	/	slash	124	|	vertical bar
48-57	0-9	numbers	125	}	closed curly bracket
58	:	colon	126	~	tilde

The following sample program asks the user a Yes or No question, then wait for either a `Y` or an `N` to be entered. All other characters are ignored.

```
%
o61091 (57 M109_01 Interactive User Input) ;
N1 #501= 0. (Clear the variable) ;
N5 M109 P501 (Sleep 1 min?) ;
IF [ #501 EQ 0. ] GOTO5 (Wait for a key) ;
IF [ #501 EQ 89. ] GOTO10 (Y) ;
IF [ #501 EQ 78. ] GOTO20 (N) ;
GOTO1 (Keep checking) ;
N10 (A Y was entered) ;
M95 (00:01) ;
GOTO30 ;
N20 (An N was entered) ;
G04 P1. (Do nothing for 1 second) ;
N30 (Stop) ;
M30 ;
%
```

The following sample program asks the user to select a number, then wait for a 1, 2, 3, 4 or a 5 to be entered; all other characters are ignored.

```
%
O61092 (58 M109_02 Interactive User Input) ;
N1 #501= 0 (Clear Variable #501) ;
(Variable #501 will be checked) ;
(Operator enters one of the following selections) ;
N5 M109 P501 (1,2,3,4,5) ;
IF [ #501 EQ 0 ] GOTO5 ;
(Wait for keyboard entry loop until entry) ;
(Decimal equivalent from 49-53 represent 1-5) ;
IF [ #501 EQ 49 ] GOTO10 (1 was entered go to N10) ;
IF [ #501 EQ 50 ] GOTO20 (2 was entered go to N20) ;
IF [ #501 EQ 51 ] GOTO30 (3 was entered go to N30) ;
IF [ #501 EQ 52 ] GOTO40 (4 was entered go to N40) ;
IF [ #501 EQ 53 ] GOTO50 (5 was entered go to N50) ;
GOTO1 (Keep checking for user input loop until found) ;
N10 ;
(If 1 was entered run this sub-routine) ;
(Go to sleep for 10 minutes) ;
#3006= 25 (Cycle start sleeps for 10 minutes) ;
M95 (00:10) ;
GOTO100 ;
N20 ;
(If 2 was entered run this sub routine) ;
(Programmed message) ;
#3006= 25 (Programmed message cycle start) ;
GOTO100 ;
N30 ;
(If 3 was entered run this sub routine) ;
(Run sub program 20) ;
#3006= 25 (Cycle start program 20 will run) ;
G65 P20 (Call sub-program 20) ;
GOTO100 ;
N40 ;
(If 4 was entered run this sub routine) ;
(Run sub program 22) ;
#3006= 25 (Cycle start program 22 will be run) ;
M98 P22 (Call sub program 22) ;
GOTO100 ;
N50 ;
(If 5 was entered run this sub-routine) ;
(Programmed message) ;
#3006= 25 (Reset or cycle start will turn power off) ;
#1106= 1 ;
```

```
N100 ;
M30 ;
%
```

M110 / M111 Secondary Spindle Chuck Clamp/Unclamp (Optional)

These M codes will clamp and unclamp the secondary spindle chuck. OD / ID clamping is set with Setting 122.

NOTE: *The sub-spindle part ejector is a spring loaded manual device that ejects the part when the jaws are opened. The part ejector is not actuated by use of an M-code.*

M112 / M113 Secondary Spindle Air Blast On/Off (Optional)

`M112` turns on the secondary spindle air blast. `M113` turns the secondary spindle air blast off. `M112 Srrr Pnnn` (`rrr` is in RPM and `nnn` is in milliseconds) turns the air blast on for the specified time, rotates the spindle at the specified speed while the air blast is on, then turns off both the spindle and the air blast automatically.

M114 / M115 Secondary Spindle Brake On/Off (Optional)

`M114` applies a caliper-style brake to hold the secondary spindle, while `M115` releases the brake.

M119 Secondary Spindle Orient (Optional)

This command orients the secondary spindle (DS lathes) to the zero position. A `P` or `R` value is added to position the spindle to a specific position. A `P` value positions the spindle to that whole degree (e.g. `P120` is 120°). An `R` value positions the spindle to a fraction of a degree (e.g. `R12.25` is 12.25°). The format is: `M119 Pxxx`/`M119 Rxx.x`. The spindle angle is viewed in the Current Commands Tool Load screen.

M121-M126 Built-In M-codes Relays with M-Fin

The `M121` through `M126` codes are built-in M-code relays. They turns on a relay, pauses the program, and waits for an external M-Fin signal.

When the control receives the M-Fin signal, the relay turns off and the program continues.**[RESET]** terminates any operation that is hung-up waiting for M-fin.

M129 Turn On M-Code Relay with M-Fin

P - Discrete output relay number.

M129 turns on a relay, pauses the program, and waits for an external M-Fin signal. An example of its usage is `M129 Pnnn`, where `nnn` is the relay number being turned on.

Built-In M-Code Relays	8M PCB Relay Bank 1 (JP1)	8M PCB Relay Bank 2 (JP2)	8M PCB Relay Bank 3 (JP3)
P114 (M121)	P90	P103	P79
P115 (M122)	P91	P104	P80
P116 (M123)	P92	P105	P81
P113 (M124)	P93	P106	P82
P112 (M125)	P94	P107	P83
P4 (M126)	P95	P108	P84
-	P96	P109	P85
-	P97	P110	P86

When the control receives the M-Fin signal, the relay turns off and the program continues. **[RESET]** stops any operation waiting for a relay-activated accessory to finish.

M130 Display Media / M131 Cancel Display Media

M130 Lets you display video and still images during program execution. Some examples of how you can use this feature are:

- Providing visual cues or work instructions during program operation
- Providing images to aid part inspection at certain points in a program
- Demonstrating procedures with video

The correct command format is `M130(file.xxx)`, where `file.xxx` is the name of the file, plus the path, if necessary. You can also add a second comment in parentheses to appear as a comment at the top of the media window.

NOTE: *`M130` uses the subprogram search settings, Settings 251 and 252 in the same way that `M98` does. You can also use the `Insert Media File` command in the editor to easily insert an `M130` code that includes the filepath. Refer to page **160** for more information.*

Permitted file formats are MP4, MOV, PNG, and JPEG.

NOTE: *For the fastest loading times, use files with pixel dimensions divisible by 8 (most unedited digital images have these dimensions by default), and a maximum pixel size of 1920 x 1080.*

Your media appears in the Media tab under Current Commands. The media displays until the next `M130` displays a different file, or `M131` clears the media tab contents.

F8.3: Media Display Example - Work Instruction during a Program

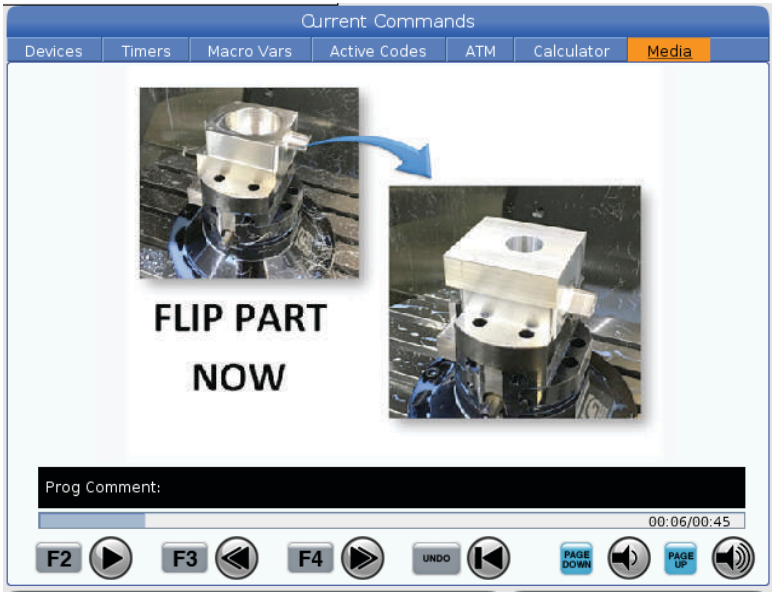

M133 / M134 / M135 Live Tool Fwd/Rev/Stop (Optional)

`M133` turns the live tool spindle in the forward direction. `M134` turns the live tool spindle in the reverse direction. `M135` stops the live tool spindle.

Spindle speed is controlled with a `P` address code. For example, `P1200` would command a spindle speed of 1200 RPM.

M138 / M139 Spindle Speed Variation On/Off

Spindle Speed Variation (SSV) lets you specify a range within which the spindle speed continuously varies. This is helpful in suppressing tool chatter, which can lead to an undesirable part finish and/or damage to the cutting tool. The control varies the spindle speed based on Settings 165 and 166. For example, to vary spindle speed +/- 100 RPM from its current commanded speed with a duty cycle of 1 seconds, set Setting 165 to 100 and Setting 166 to 1.

The variation you use depends on the material, tooling, and the characteristics of you application, but 100 RPM over 1 second is a good starting point.

You can override the values of settings 165 and 166 using P and E address codes when used with M138. Where P is SSV Variation (RPM) and E is the SSV Cycle (Sec). See example below:

```
M138 P500 E1.5 (Turn SSV On, vary the speed by 500 RPM, cycle
every 1.5 seconds);


M138 P500(Turn SSV on, vary the speed by 500, cycle based on
setting 166);


M138 E1.5 (Turn SSV on, vary the speed by setting 165, cycle
every 1.5 seconds);
```

M138 is independent of spindle commands; once commanded, it is active even when the spindle is not turning. Also, M138 remains active until canceled with M139, or at M30, Reset, or Emergency Stop.

M143 / M144 / M145 Secondary Spindle Fwd/Rev/Stop (Optional)

`M143` turns the secondary spindle in the forward direction. `M144` turns the secondary spindle in the reverse direction. `M145` stops the secondary spindle

The subspindle speed is controlled with an `P` address code, for example, `P1200` commands a spindle speed of 1200 RPM.

M146 Steady Rest Clamp / M147 Steady Rest Unclamp

`M146` clamps the steady rest and `M147` unclamps it.

M158 Mist Condenser On / M159 Mist Condenser Off

`M158` turns on the Mist Condenser, and `M159` turns off the Mist Condenser.

NOTE: *The mist condenser will run continuously if a program is running with axis motion.*

NOTE: *An `M158` in MDI will activate the mist condenser for 10 seconds, after this the mist condenser will turn OFF. If continuous operation is required the program will require feed motion of at least one axis.*

NOTE: *If you want the mist condenser to remain ON, then go to CURRENT COMMANDS>DEVICES>MECHANISMS>MIST CONDENSER and press* **[F2]** *to turn it on*

M219 Live Tool Orient (Optional)

P - Number of degrees (0 - 360)
R - Number of degrees with two decimal places (0.00 - 360.00).

`M219` adjusts the live tool to a fixed position. An `M219` orients the spindle to the zero position. The orient spindle function allows P and R address codes. For example:

```
M219 P270. (orients the live tool to 270 degrees) ;
```

The `R`-value allows the programmer to specify up to two decimal places; for example:

```
M219 R123.45 (orients the live tool to 123.45 degrees) ;
```

8.2 More Information Online

For updated and supplemental information, including tips, tricks, maintenance procedures, and more, visit the Haas Service page at www.HaasCNC.com. You can also scan the code below with your mobile device to go directly to the Haas Service page:

Chapter 9: Settings

9.1 Introduction

This chapter gives detailed descriptions of the settings that control the way that your machine works.

9.1.1 List of Settings

Inside the **SETTINGS** tab, the settings are organized into groups. Use the **[UP]** and **[DOWN]** cursor arrow keys to highlight a setting group. Press the **[RIGHT]** cursor arrow key to see the settings in a group, . Press the **[LEFT]** cursor arrow key to return to the setting group list.

To quickly access a single setting, make sure the **SETTINGS** tab is active, type the setting number, and then press **[F1]** or, if a setting is highlighted, press the **[DOWN]** cursor.

Some settings have numerical values that fit in a given range. To change the value of these settings, type the new value and press **[ENTER]**. Other settings have specific available values that you select from a list. For these settings, use the **[RIGHT]** cursor to display the choices. Press **[UP]** and **[DOWN]** to scroll through the options. Press **[ENTER]** to select the option.

Setting	Description	Page
1	Auto Power Off Timer	**424**
2	Power Off at M30	**424**
4	Graphics Rapid Path	**424**
5	Graphics Drill Point	**424**
6	Front Panel Lock	**424**
8	Prog Memory Lock	**425**
9	Dimensioning	**425**
10	Limit Rapid at 50%	**425**
17	Opt Stop Lock Out	**426**
18	Block Delete Lock Out	**426**

Setting	Description	Page
19	Feedrate Override Lock	**426**
20	Spindle Override Lock	**426**
21	Rapid Override Lock	**426**
22	Can Cycle Delta Z	**426**
23	9xxx Progs Edit Lock	**426**
28	Can Cycle Act w/o X/Y	**426**
29	G91 Non-modal	**427**
31	Reset Program Pointer	**427**
32	Coolant Override	**427**
39	Beep @ M00, M01, M02, M30	**427**
42	M00 After Tool Change	**427**
43	Cutter Comp Type	**427**
44	Min F Radius CC%	**428**
45	Mirror Image X Axis	**428**
46	Mirror Image Y Axis	**428**
47	Mirror Image Z Axis	**428**
52	G83 Retract Above R	**429**
53	Jog w/o Zero Return	**429**
56	M30 Restore Default G	**429**
57	Exact Stop Canned X-Y	**429**
58	Cutter Compensation	**429**
59	Probe Offset X+	**430**
60	Probe Offset X-	**430**

Setting	Description	Page
63	Tool Probe Width	**430**
64	Tool Offset Measure Uses Work	**430**
74	9xxx Progs Trace	**431**
75	9xxx Progs Single BLK	**431**
77	Scale Integer F	**431**
80	Mirror Image B Axis	**432**
82	Language	**432**
83	M30/Resets Overrides	**432**
84	Tool Overload Action	**432**
85	Maximum Corner Rounding	**433**
87	Tool Change Resets Override	**434**
88	Reset Resets Override	**434**
90	Max Tools To Display	**434**
93	Tailstock X Clearance	**435**
94	Tailstock Z Clearance	**435**
95	Thread Chamfer Size	**436**
96	Thread Chamfer Angle	**436**
97	Tool Change Direction	**436**
99	Thread Minimum Cut	**437**
101	Feed Override -> Rapid	**437**
102	C Axis Diameter	**437**
103	Cyc Start/Fh Same Key	**437**
104	Jog Handle to SNGL BLK	**437**

Setting	Description	Page
105	TailStock Retract Distance	**437**
108	Quick Rotary G28	**438**
109	Warm-Up Time in Min.	**438**
110	Warmup X Distance	**438**
111	Warmup Y Distance	**438**
112	Warmup Z Distance	**438**
113	Tool Change Method	**439**
114	Conveyor Cycle Time (minutes)	**439**
115	Conveyor On-Time (minutes)	**439**
117	G143 Global Offset	**439**
118	M99 Bumps M30 Cntrs	**440**
119	Offset Lock	**440**
120	Macro Var Lock	**440**
130	Tap Retract Speed	**440**
131	Auto Door	**440**
133	Repeat Rigid Tap	**441**
142	Offset Chng Tolerance	**441**
143	Machine Data Collection Port	**441**
144	Feed Override -> Spindle	**441**
145	Tailstock At Part For Cycle Start	**441**
155	Load Pocket Tables	**441**
156	Save Offsets with Program	**442**
158	X Screw Thermal Comp%	**442**

Setting	Description	Page
159	Y Screw Thermal Comp%	**442**
160	Z Screw Thermal Comp%	**442**
162	Default To Float	**442**
163	Disable .1 Jog Rate	**442**
165	Ssv Variation (RPM)	**443**
166	Ssv Cycle	**443**
191	Default Smoothness	**443**
196	Conveyor Shutoff	**443**
197	Coolant Shutoff	**443**
199	Backlight Timer	**443**
216	Servo and Hydraulic Shutoff	**443**
232	G76 Default P Code	**443**
238	High Intensity Light Timer (minutes)	**443**
239	Worklight Off Timer (minutes)	**444**
240	Tool Life Warning	**444**
241	Tailstock Hold Force	**444**
242	Air Water Purge Interval	**441**
243	Air Water Purge On-Time	**444**
245	Hazardous Vibration Sensitivity	**444**
247	Simultaneous XYZ Motion in Tool Change	**445**
250	Mirror Image C Axis	**445**
251	Subprogram Search Location	**445**
252	Custom Subprogram Search Location	**446**

Setting	Description	Page
253	Default Graphics Tool Width	**447**
261	DPRNT Store Location	**447**
262	DPRNT Destination File Path	**448**
263	DPRNT Port	**448**
264	Autofeed Step Up	**449**
265	Autofeed Step Down	**449**
266	Autofeed Minimum Override	**449**
267	Exit Jog Mode After Idle TIme	**449**
268	Second Home Position X	**449**
269	Second Home Position Y	**449**
270	Second Home Position Z	**449**
276	Workholding Input Monitor	**450**
277	Lubrication Cycle Interval	**451**
281	Chuck Foot Pedal Lock Out	**451**
282	Main Spindle Chuck Clamping	**451**
283	Chuck Unclamp RPM	**451**
284	Cycle Start Allowed With Chuck Unclamped	**451**
285	X Diameter Programming	**451**
286	Canned Cycle Cut Depth	**451**
287	Canned Cycle Retraction	**451**
289	Thread Finish Allowance	**451**
291	Main Spindle Speed Limit	**452**
292	Door Open Spindle Speed Limit	**452**

Setting	Description	Page
306	Minimum Chip Clear Time	**452**
313	Max User Tavel Limit X	**452**
314	Max User Travel Limit Y	**452**
315	Max User Travel Limit Z	**452**
319	VDI Spindle Center Line X	**452**
320	BOT Spindle Center Line X	**452**
321	Spindle Center Line Y	**452**
322	Foot Pedal Tailstock Alarm	**453**
323	Disable Notch Filter	**453**
325	Manual Mode Enabled	**453**
326	Graphics X Zero Location	**453**
327	Graphics Z Zero Location	**454**
328	eHandwheel Rapid Limit	**454**
329	Main Spindle Jog Speed	**454**
330	MultiBoot Selection Time out	**454**
331	Sub Spindle Jog Speed	**454**
332	Foot Pedal Lockout	**454**
333	Probe Offset Z+	**454**
334	Probe Offset Z-	**454**
335	Linear Rapid Mode	**455**
336	Bar Feeder Enable	**455**
337	Safe Tool Change Location X	**456**
338	Safe Tool Change Location Y	**456**

Setting	Description	Page
339	Safe Tool Change Location Z	**456**
340	Chuck Clamp Delay Time	**456**
341	Tailstock Rapid Position	**456**
342	Tailstock Advance Distance	**456**
343	Sub Spindle SSV Variation	**457**
344	Sub Spindle SSV Cycle	**457**
345	Sub Spindle Chuck Clamping	**457**
346	Sub Spindle Chuck Unclamp RPM	**457**
347	Live Tooling SSV Variation	**458**
348	Live Tooling SSV Cycle	**458**
349	Live Tooling Chuck Clamping	**458**
350	Live Tooling Chuck Unclamp RPM	**458**
352	Live Tooling Speed Limit	**458**
355	Sub Spindle Speed Limit	**458**
356	Beeper Volume	**458**
357	WarmUp Compensation Cycle Start Idle Time	**459**
358	Steady Rest Clamp/Unclamp Delay Time	**459**
359	SS Chuck Clamp Delay Time	**459**
360	Steady Rest Foot Pedal Lockout	**459**
361	Bar Pusher Vent Time	**459**
368	Live Tooling Type	**459**
372	Parts Loader Type	**460**
375	APL Gripper Type	**460**

Setting	Description	Page
376	Light Curtain Enable	**460**
377	Negative Work Offsets	**461**
378	Safe Zone Calibrated Geometry Reference Point X	**461**
379	Safe Zone Calibrated Geometry Reference Point Y	**461**
380	Safe Zone Calibrated Geometry Reference Point X	**461**
381	Enable Touchscreen	**461**
383	Table Row Size	**461**
396	Enable / Disable Virtual Keyboard	**461**
397	Press and Hold Delay	**461**
398	Header Height	**461**
399	Tab Height	**462**
403	Change Popup Button Size	**462**
409	Default Coolant Pressure	**462**
410	Safe Tool Change Location B	**462**
413	Main Spindle Load Type	**462**
414	Sub Spindle Load Type	**463**
415	Live Tool Load Type	**463**
416	Media Destination	**463**
417	Chuck Unclamp Delay Time	**463**
418	SS Chuck Unclamp Delay Time	**463**

1 - Auto Power Off Timer

This setting is used to automatically power-down the machine after a period of idle time. The value entered in this setting is the number of minutes the machine remains idle until it is powered down. The machine does not power down while a program is running, and the time (number of minutes) starts back at zero anytime a button is pressed or the **[HANDLE JOG]** control is used. The auto-off sequence gives the operator a 15-second warning before power down, at which time pressing any button stops the power down.

2 - Power Off at M30

If this setting is set to **ON**, the machine powers down at the end of a program (`M30`). The machine gives the operator a 15-second warning once an `M30` is reached. Press any key to interrupt the power-off sequence.

4 - Graphics Rapid Path

This setting changes the way a program is viewed in the Graphics mode. When it is **OFF**, rapid, non-cutting tool motions do not leave a path. When it is **ON**, rapid tool motions leave a dashed line on the screen.

F9.1: Setting 4 -Graphics Rapid Path:[1] All Rapid Tool Motions Shown with a Dashed Line When **ON**. [2] Only Cut Lines Shown When OFF.

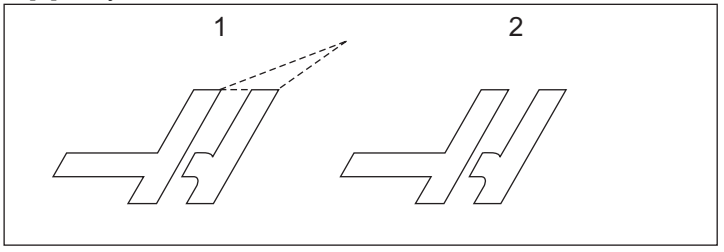

5 - Graphics Drill Point

This setting changes the way a program is viewed in Graphics mode. When it is **ON**, canned cycle drill locations leave a circle mark on the screen. When it is **OFF**, no additional marks are shown on the graphics display.

6 - Front Panel Lock

When set to **ON**, this setting disables the following keys:

- Spindle **[FWD]**/**[REV]**
- [**TURRET FWD]**/**[TURRET REV]**
- [**NEXT TOOL]**
- [**TOOL RELEASE]**

8 - Prog Memory Lock

This setting locks out the memory editing functions (**[ALTER]**, **[INSERT]**, etc.) when it is set to **ON**. This also locks out MDI. Editing functions are not restricted by this setting.

9 - Dimensioning

This setting selects between inch and metric mode. When it is set to **INCH**, the programmed units for X and Z are inches, to 0.0001". When it is set to **MM**, programmed units are millimeters, to 0.001 mm. All offset values are converted when this setting is changed from inches to millimeters, or vice versa. However, changing this setting does not automatically translate a program stored in memory; you must change the programmed axis values for the new units.

When set to **INCH**, the default G code is `G20`, when set to **MM**, the default G code is `G21`.

	Inch	Metric
Feed	in/min and in/rev	mm/min and mm/rev
Max Travel	Varies by axis and model	
Minimum programmable dimension	.0001	.001

Axis jog key	Inch	Metric
.0001	.0001 in/jog click	.001 mm/jog click
.001	.001 in/jog click	.01 mm/jog click
.01	.01 in/jog click	.1 mm/jog click
.1	.1 in/jog click	1 mm/jog click

10 - Limit Rapid at 50%

Turning this setting **ON** limits the machine to 50% of its fastest non-cutting axis motion (rapids). This means, if the machine can position the axes at 700 inches per minute (ipm), it is limited to 350 ipm when this setting is **ON**. The control displays a 50% rapid override message, when this setting is **ON**. When it is **OFF**, the highest rapid speed of 100% is available.

17 - Opt Stop Lock Out

The Optional Stop feature is not available when this setting is **ON**.

18 - Block Delete Lock Out

The Block Delete feature is not available when this setting is **ON**.

19 - Feedrate Override Lock

The feedrate override buttons are disabled when this setting is turned **ON**.

20 - Spindle Override Lock

The spindle speed override keys are disabled when this setting is turned **ON**.

21 - Rapid Override Lock

The axis rapid override keys are disabled when this setting is turned **ON**.

22 - Can Cycle Delta Z

This setting specifies the distance to retract the Z Axis to clear chips during a `G73` irregular path stock removal cycle.

23 - 9xxx Progs Edit Lock

When this setting is **ON**, the control does not let you view or alter the files in the **09000** directory in **Memory/**. This protects macro programs, probing cycles, and any other files in the **09000** folder.

If you attempt to access the 09000 folder while Setting 23 is **ON**, you get the message *`Setting 23 restricts access to folder.`*

28 - Can Cycle Act w/o X/Y

This is an **ON**/**OFF** setting. The preferred setting is **ON**.

When it is **OFF**, the initial canned cycle definition block requires an `X` or `Y` code for the canned cycle to be executed.

When it is **ON**, the initial canned cycle definition block causes one cycle to be executed even when there is no `X` or `Y` code in the block.

NOTE: *When an `L0` is in that block, it will not execute the canned cycle on the definition line. This setting has no effect on G72 cycles.*

29 - G91 Non-modal

Turning this setting **ON** uses the G91 command only in the program block it is in (non-modal). When it is **OFF**, and a G91 is commanded, the machine uses incremental moves for all axis positions.

NOTE: *This setting must be* **OFF** *for G47 engraving cycles.*

31 - Reset Program Pointer

When this setting is **OFF**, **[RESET]** does not change the position of the program pointer. When it is **ON**, pressing **[RESET]** moves the program pointer to the beginning of the program.

32 - Coolant Override

This setting controls how the coolant pump operates. When Setting 32 **NORMAL**, you can press **[COOLANT]**, or you can use M-codes in a program, to turn the coolant pump on and off.

When Setting 32 is **OFF**, the control gives the message *FUNCTION LOCKED* when you press **[COOLANT]**. The control gives an alarm when a program commands the coolant pump on or off.

When Setting 32 is **IGNORE**, the control ignores all programmed coolant commands, but you can press **[COOLANT]** to turn the coolant pump on or off.

39 - Beep @ M00, M01, M02, M30

Turning this setting **ON** causes the keyboard beeper to sound when an M00, M01 (with Optional Stop active), M02, or an M30 is found. The beeper continues until a button is pressed.

42 - M00 After Tool Change

Turning this setting **ON** stops the program after a tool change and a message is displayed stating this. **[CYCLE START]** must be pressed to continue the program.

43 - Cutter Comp Type

This controls how the first stroke of a compensated cut begins and the way the tool is cleared from the part. The selections can be **A** or **B**; see the Tool Nose Compensation section on page **175**.

44 - Min F In Radius CC %

Minimum feedrate in radius tool nose compensation percent affects the feedrate when cutter compensation moves the tool towards the inside of a circular cut. This type of cut slows down to maintain a constant surface feedrate. This setting specifies the slowest feedrate as a percentage of the programmed feedrate.

45, 46, 47 - Mirror Image X, Y, Z Axis

When one or more of these settings is **ON**, axis motion is mirrored (reversed) around the work zero point. See also `G101`, Enable Mirror Image.

F9.2: No Mirror Image [1], Setting 45 **ON** - X Mirror [2], Setting 46 **ON** - Y Mirror [4], Setting 45 and Setting 46 **ON** - XY Mirror [3]

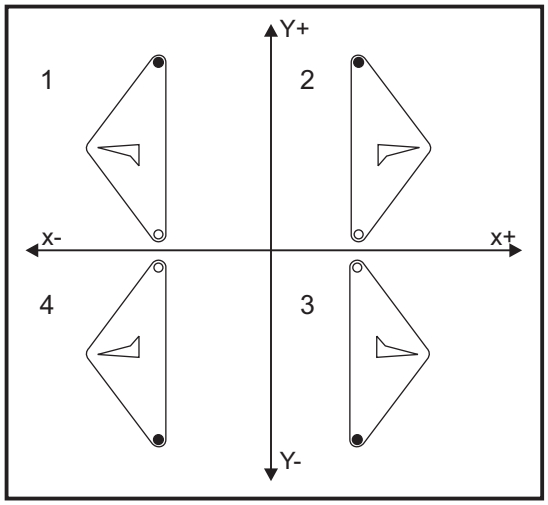

52 - G83 Retract Above R

This setting changes the way G83 (peck drilling cycle) behaves. Most programmers set the reference (R) plane well above the cut to ensure that the chip clearing motion actually allows the chips to get out of the hole. However this wastes time as the machine drills through empty distance. If Setting 52 is set to the distance required to clear chips, the R plane can be put closer to the part being drilled.

F9.3: Setting 52 - G83 Retract Above R: [#52] Setting 52, [1] Start position, [2] R plane, [3] Face of the part.

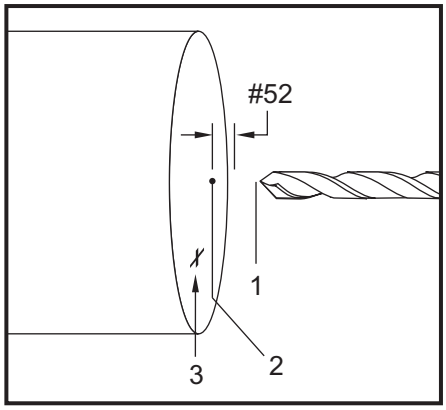

53 - Jog w/o Zero Return

Turning this setting **ON** allows the axes to be jogged without zero returning the machine (finding machine home). This is a dangerous condition as the axis can be run into the mechanical stops and possibly damage the machine. When the control is powered up, this setting automatically returns to **OFF**.

56 - M30 Restore Default G

When this setting is **ON**, ending a program with M30 or pressing **[RESET]** returns all modal G-codes to their defaults.

57 - Exact Stop Canned X-Z

The rapid XZ motion associated with a canned cycle may not achieve an exact stop when this setting is **OFF**. Turning this setting **ON** makes the XZ motion come to an exact stop.

58 - Cutter Compensation

This setting selects the type of cutter compensation used (FANUC or YASNAC). Refer to the tool functions section on page **171**.

59, 60 - Probe Offset X+, X-

These settings are used to define the displacement and size of the ATP. These four settings (59, 60, 333, 334) specify the travel distance and direction from where the probe is triggered to where the actual sensed surface is located.

For more information on how to calibrate the ATP refer to page **219**.

These settings are used by the `G31` code. The values entered for each setting must be positive numbers.

Macros can be used to access these settings, see the Macro section for more information.

F9.4: 59/60/X##/## Tool Probe Offset:[1] Chuck, [2] Part, [3] Probe, [#59] Setting 59, [#60] Setting 60, [###] Setting ##, [###] Setting ##,

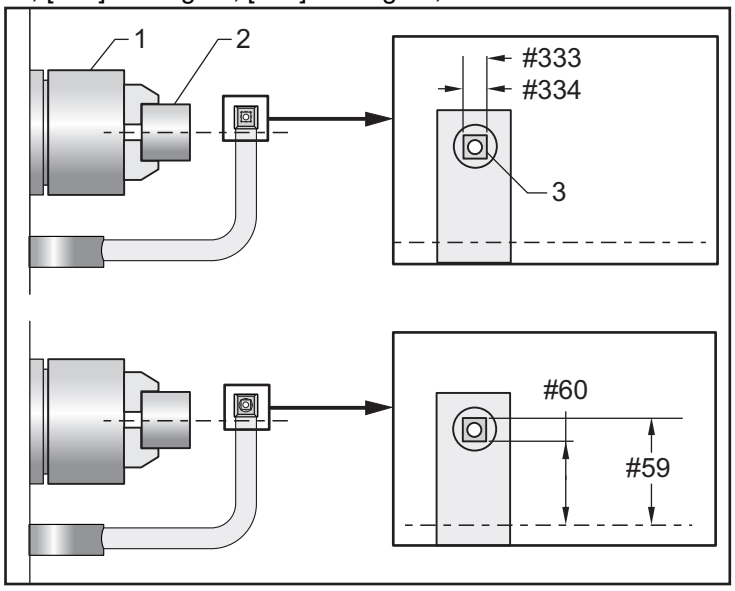

63 - Tool Probe Width

This setting is used to specify the width of the probe used to test tool diameter. This setting only applies to the probing option.

For more information on how to calibrate the ATP refer to page **219**.

64 - T. Ofs Meas Uses Work

The (Tool Offset Measure Uses Work) setting changes the way the **[Z FACE MEASURE]** key works. When this is **ON**, the entered tool offset is the measured tool offset plus the work coordinate offset (Z-axis). When it is **OFF**, the tool offset equals the Z machine position.

74 - 9xxx Progs Trace

This setting, along with Setting 75, is useful for debugging CNC programs. When Setting 74 is **ON**, the control displays the code in the macro programs (O9xxxx). When the setting is **OFF**, the control does not display the 9000 series code.

75 - 9xxxx Progs Single BLK

When Setting 75 is **ON** and the control is operating in Single Block mode, then the control stops at each block of code in a macro program (O9xxxx) and waits for the operator to press **[CYCLE START]**. When Setting 75 is **OFF** the macro program is run continuously, the control does not pause at each block, even if Single Block is **ON**. The default setting is **ON**.

When Setting 74 and Setting 75 are both **ON**, the control acts normally. That is, all blocks executed are highlighted and displayed, and when in Single-Block mode there is a pause before each block is executed.

When Setting 74 and Setting 75 are both **OFF**, the control executes 9000 series programs without displaying the program code. If the control is in Single-Block mode, no single-block pause occurs during the running of the 9000 series program.

When Setting 75 is **ON** and Setting 74 is **OFF**, 9000 series programs are displayed as they are executed.

77 - Scale Integer F

This setting allows the operator to select how the control interprets an F value (feedrate) that does not contain a decimal point. (It is recommended that you always use a decimal point.) This setting helps operators run programs developed on a control other than Haas.

There are 5 feedrate settings. This chart shows the effect of each setting on a given F10 address.

INCH		MILLIMETER	
Setting 77	Feedrate	Setting 77	Feedrate
DEFAULT	F0.0010	DEFAULT	F0.0100
INTEGER	F10.	INTEGER	F10.
.1	F1.0	.1	F1.0
.01	F0.10	.01	F0.10

INCH		MILLIMETER	
.001	F0.010	.001	F0.010
.0001	F0.0010	.0001	F0.0010

80 - Mirror Image B Axis

This is an **ON**/**OFF** setting. When it is **OFF**, axis motions occur normally. When it is **ON**, B-Axis motion may be mirrored (or reversed) around the work zero point. Also, see G101 and Settings 45, 46, 47, 48, and 250.

82 - Language

Languages other than English are available in the Haas control. To change to another language, choose a language with the **[LEFT]** and **[RIGHT]** cursor arrows, then press **[ENTER]**.

83 - M30/Resets Overrides

When this setting is **ON**, an M30 restores any overrides (feedrate, spindle, rapid) to their default values (100%).

84 - Tool Overload Action

When a tool becomes overloaded, Setting 84 designates the control response. These settings cause specified actions (refer to the Advanced Tool Management Introduction

on page **136**):

- **ALARM** causes the machine to stop.
- **FEEDHOLD** displays the message *Tool Overload* and the machine stops in a feedhold situation. Press any key to clear the message.
- **BEEP** causes an audible noise (beep) from the control.
- **AUTOFEED** causes the control to automatically limit the feedrate based on the tool load.

NOTE: *When tapping (rigid or floating), the feed and spindle overrides are locked out, so the* **AUTOFEED** *setting is ineffective (the control appears to respond to the override buttons, by displaying the override messages).*

CAUTION: *Do not use the* **AUTOFEED** *setting when thread milling or auto reversing tapping heads, as it can cause unpredictable results or even a crash.*

The last commanded feedrate is restored at the end of program execution, or when the operator presses **[RESET]** or turns **OFF** the **AUTOFEED** setting. The operator can use **[FEEDRATE OVERRIDE]** while the **AUTOFEED** setting is selected. These keys are recognized by the **AUTOFEED** setting as the new commanded feedrate as long as the tool load limit is not exceeded. However, if the tool load limit has already been exceeded, the control ignores **[FEEDRATE OVERRIDE]**.

85 - Maximum Corner Rounding

This setting defines the machining accuracy tolerance around corners. The initial default value is 0.05". This means that the control keeps the radii of corners no bigger than 0.05".

Setting 85 causes the control to adjust feeds around corners to meet the tolerance value. The lower the value of Setting 85, the slower the control feeds around corners to meet the tolerance. The higher the value of Setting 85, the faster the control feeds around corners, up to the commanded feedrate, but it could round the corner off to a radius up to the tolerance value.

NOTE: *The angle of the corner also affects the change to the feedrate. The control can cut shallow corners within tolerance at a higher feedrate than it can with tighter corners.*

F9.5: The control can cut corner [1] within tolerance at a higher feedrate than it can cut corner [2].

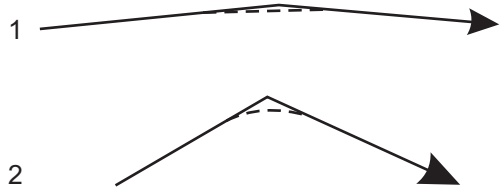

If Setting 85 has a value of zero, the control acts as if exact stop is active in each motion block.

Refer also to `G187 - Accuracy Control (Group 00)` on page **372**.

F9.6: Assume that the commanded feedrate is too high to achieve corner [1]. If Setting 85 has a value of 0.025, then the control slows the feedrate enough to achieve corner [2] (with a radius of 0.025"). If Setting 85 has a value of 0.05, then the control slows the feedrate enough to achieve corner [3]. The feedrate to achieve corner [3] is faster than the feedrate to achieve corner [2].

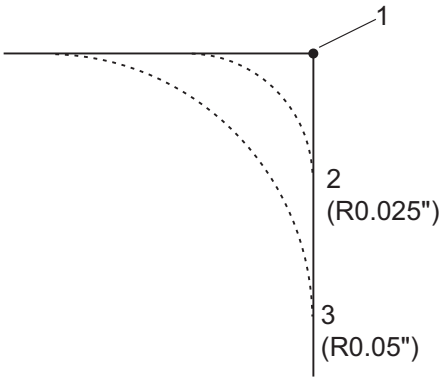

87 - Tool Change Resets Override

This is an **ON**/**OFF** setting. When a `Tnn` tool change is executed and this setting is **ON**, any overrides are canceled and set to their programmed values.

NOTE: *This setting only affects programmed tool changes, it does not affect* **[TURRET FWD]** *or* **[TURRET REV]** *tool changes.*

88 - Reset Resets Overrides

This is an **ON**/**OFF** setting. When it is **ON** and **[RESET]** is pressed, any overrides are canceled and set to their programmed values or defaults (100%).

90 - Max Tools To Display

This setting limits the number of tools displayed on the Tool Offsets screen.

93 - Tailstock X Clearance

This setting works with Setting 94 to define a tailstock travel restriction zone that limits interaction between the tailstock and the tool turret. This setting determines the X-axis travel limit when the difference between the Z-axis location and the tailstock location falls below the value in Setting 94. If this condition occurs and a program is running then an alarm is generated. When jogging, no alarm is generated, but travel will be limited.

F9.7: Tailstock X Clearance

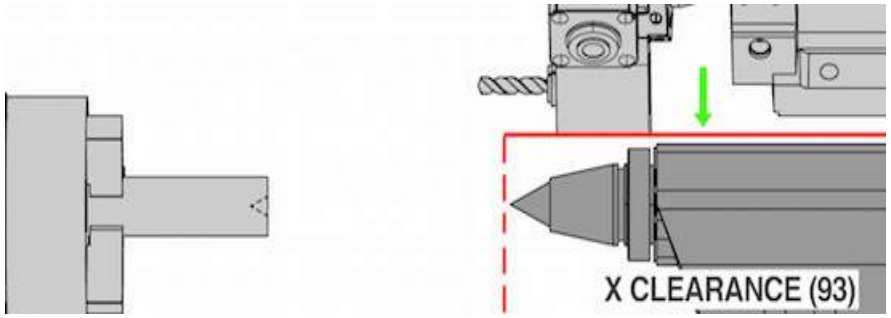

94 - Tailstock Z Clearance

This setting is the minimum allowable difference between the Z-axis and the tailstock (see Setting 93). If units are in inches, a value of -1.0000 means that when the X-axis is below the X clearance plane (Setting 93), the Z-axis must be more than 1 inch away from the tailstock position in the Z-axis negative direction.

F9.8: Tailstock Z Clearance

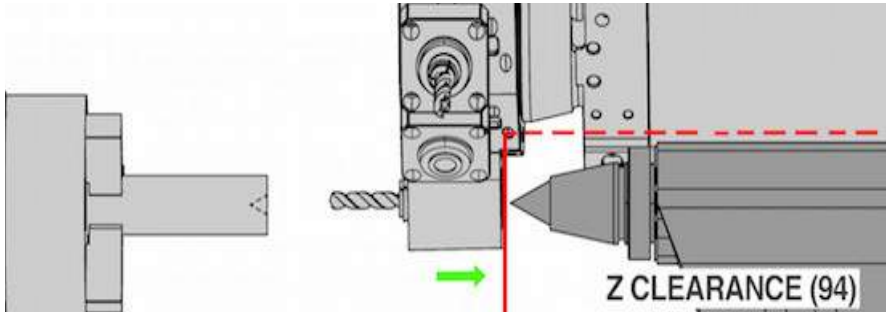

95 - Thread Chamfer Size

This setting is used in G76 and G92 threading cycles when an M23 is commanded. When command M23 is active, threading strokes end with an angled retraction, as opposed to pulling straight out. The value in Setting 95 is equal to the number of turns (chamfered threads) desired.

NOTE: *Settings 95 and 96 interact with each other. (Multiple of current thread lead, F or E).*

F9.9: Setting 95 - Thread Chamfer Size, G76 or G92 threading stroke with M23 active: [1] Setting 96 = 45, [2] Setting 95 x Lead, [3] Tool path, [4] Programmed thread endpoint, [5] Actual stroke endpoint, [6] Lead.

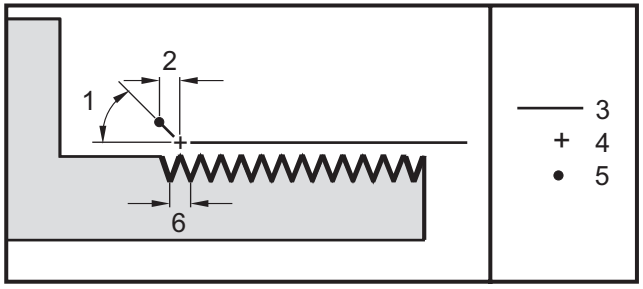

96 - Thread Chamfer Angle

See Setting 95.

97 - Tool Change Direction

This setting determines the default tool change direction. It may be set to either **SHORTEST** or M17/M18.

When **SHORTEST** is selected, the control turns in the direction necessary to reach the next tool with the least movement. The program can still use M17 and M18 to fix the tool change direction, but once this is done it is not possible to revert back to the shortest tool direction other than **[RESET]** or M30/M02.

Selecting M17/M18, the control moves the tool turret either always forward or always reverse based on the most recent M17 or M18. When **[RESET]**, **[POWER ON]**, or M30/M02 is executed, the control assumes M17 as the tool turret direction during tool changes, always forward. This option is useful when a program must avoid certain areas of the tool turret due to odd-sized tools.

99 - Thread Minimum Cut

Used in G76 canned threading cycle, this setting sets a minimum amount of successive passes of the thread cut. Succeeding passes cannot be less than the value in this setting. The default value is .0010 inches.

101 - Feed Override -> Rapid

Pressing **[HANDLE FEED]**, with this setting **ON**, will cause the jog handle to affect both the feedrate and the rapid rate overrides. Setting 10 affects the maximum rapid rate. The rapid rate cannot exceed 100%. Also, **[+10% FEEDRATE]**, **[- 10% FEEDRATE]**, and **[100% FEEDRATE]** change the rapid and feed rate together.

102 - C Axis Diameter

This setting supports the C-Axis option.

This is a numeric entry. It is used to set the angular feed rate of the C-axis. Since the feed rate specified in a program is always inches per minute (or mm per minute), the control must know the diameter of the part being worked in the C-axis in order to compute the angular feed rate.

When this setting is set correctly, the surface feed rate on a spindle cut will be exactly the feed rate programmed into the control. See the C-Axis Section for more information.

103 - Cyc Start/Fh Same Key

The **[CYCLE START]** button must be pressed and held to run a program when this setting is **ON**. When **[CYCLE START]** is released, a feed hold is generated.

This setting cannot be turned on while Setting 104 is **ON**. When one of them is set to **ON**, the other automatically turns off.

104 - Jog Handle to SNGL BLK

The **[HANDLE JOG]** control can single-step through a program when this setting is **ON**. Reversing the **[HANDLE JOG]** control direction generates a feed hold.

This setting cannot be turned on while Setting 103 is **ON**. When one of them is set to **ON**, the other automatically turns off.

105 - TailStock Retract Distance

The distance from the rapid position the tailstock will retract when commanded. This setting should be a positive value.

NOTE: *This setting is in the* **User Positions** *tab under* **Settings**

108 - Quick Rotary G28

If this setting is **ON**, the control returns the rotary axes to zero in +/-359.99 degrees or less.

For example, if the rotary unit is at +/-950.000 degrees and a zero return is commanded, the rotary table rotates +/-230.000 degrees to the home position if this setting is **ON**.

NOTE: *The rotary axis returns to the machine home position, not the active work coordinate position.*

NOTE: *This function only works when used with a `G91` and not a `G90`.*

109 - Warm-Up Time in MIN.

This is the number of minutes (up to 300 minutes from power-up) during which the control applies the compensations specified in Settings 110-112.

Overview – When the machine is powered on, if Setting 109, and at least one of Settings 110, 111, or 112, are set to a nonzero value, the control gives this warning:

```
CAUTION! Warm up Compensation is specified!

Do you wish to activate

Warm up Compensation (Y/N)?
```

If you answer `Y` to the prompt, the control immediately applies the total compensation (Setting 110, 111, 112), and the compensation begins to decrease as the time elapses. For instance, after 50% of the time in Setting 109 has elapsed, the compensation distance is 50%.

To restart the time period, power the machine off and on, and then answer **YES** to the compensation query at start-up.

CAUTION: *Changing Setting 110, 111, or 112 while compensation is in progress can cause a sudden movement of up to 0.0044 inch.*

110, 111, 112 - Warmup X, Y, Z Distance

Settings 110, 111, and 112 specify the amount of compensation (max = +/- 0.0020" or +/- 0.051 mm) applied to the axes. Setting 109 must have a value entered for settings 110-112 to have an effect.

113 - Tool Change Method

This setting is used for the TL-1 and TL-2 lathes. This setting selects how a tool change is executed.

A selection of **Auto** defaults to the automatic tool changer on the machine.

A selection of **Gang Tl** allows you to implement a Gang Tl tool changer. A Gang Tl consists only of a change in tool offsets:

- T12 switches to tool 12 and uses the offset from tool 12
- T1213 switches to tool 12 and uses the offset from tool 13
- T1200 switches to tool 12 and uses no tool offset

A selection of **Tl Post** allows for a manual tool change operation. When a tool change is executed in a program, the machine will stop at a tool change and prompt you to load the tool. Load the spindle and press **[CYCLE START]** to continue the program.

114 - Conveyor Cycle (minutes)

Setting 114 Conveyor Cycle Time is the interval that the conveyor turns on automatically. For example, if setting 114 is set to 30, the chip conveyor turns on every half an hour.

On-time should be set no greater than 80% of cycle time. Refer to Setting 115 on page **439**.

NOTE: *The* **[CHIP FWD]** *button (or* `M31`*) starts the conveyor in the forward direction and starts the cycle.*

The **[CHIP STOP]** *button (or* `M33`*) stops the conveyor and cancels the cycle.*

115 - Conveyor On-time (minutes)

Setting 115 Conveyor On-Time is the amount of time the conveyor runs. For example, if setting 115 is set to 2, the chip conveyor runs for 2 minutes, then turns off.

On-time should be set no greater than 80% of cycle time. Refer to Setting 114 Cycle Time on page **439**.

NOTE: *The* **[CHIP FWD]** *button (or* `M31`*) starts the conveyor in the forward direction and starts the cycle.*

The **[CHIP STOP]** *button (or* `M33`*) stops the conveyor and cancels the cycle.*

117 - G143 Global Offset (VR Models Only)

This setting is provided for customers who have several 5-axis Haas mills and want to transfer the programs and tools from one to another. The pivot-length difference is entered into this setting, and it is applied to the `G143` tool length compensation.

118 - M99 Bumps M30 CNTRS

When this setting is **ON**, an M99 adds one to the M30 counters (these are visible after pressing **[CURRENT COMMANDS]**).

NOTE: *M99 only increases the counters as it occurs in a main program, not in a sub-program.*

119 - Offset Lock

Turning the setting **ON** does not allow the values in the Offset display to be altered. However, programs that alter offsets with macros or G10 are permitted to do so.

120 - Macro Var Lock

Turning this setting **ON** does not allow the macro variables to be altered. However, programs that alter macro variables can do so.

130 - Tap Retract Speed

This setting affects the retract speed during a tapping cycle (The mill must have the Rigid Tapping option). Entering a value, such as 2, commands the mill to retract the tap twice as fast as it went in. If the value is 3, it retracts three times as fast. A value of 0 or 1 has no effect on the retract speed.

Entering a value of 2 is the equivalent of using a J address code value of 2 for G84 (tapping canned cycle). However, specifying a J code for a rigid tap overrides Setting 130.

131 - Auto Door

This setting supports the Auto Door option. It should be set to **ON** for machines with an autodoor. Also see M85/M86 (Autodoor Open/Close M-codes).

NOTE: *The M-codes work only while the machine receives a cell-safe signal from a robot. For more information, contact a robot integrator.*

The door closes when **[CYCLE START]** is pressed and opens when the program reaches an M00, M01 (with Optional Stop turned on), M02 or M30 and the spindle has stopped turning.

133 - Repeat Rigid Tap

This setting (Repeat Rigid Tap) ensures that the spindle is oriented during tapping so that the threads line up when a second tapping pass is programmed in the same hole.

NOTE: *This setting must be* **ON** *when a program commands peck tapping.*

142 - Offset Chng Tolerance

This setting is intended to prevent operator errors. It generates a warning message if an offset is changed by more than the setting's value, 0 to 3.9370 inches (0 to 100 mm). If you change an offset by more than the entered amount (either positive or negative), the control prompts: *XX changes the offset by more than Setting 142! Accept (Y/N)?*

Press **[Y]** to continue and update the offset. Press **[N]** to reject the change.

143 - Machine Data Collection Port

When this setting has a non-zero value, it defines the network port that the control uses to send machine data collection information. If this setting has a value of zero, the control does not send machine data collection information.

144 - Feed Override->Spindle

This setting is intended to keep the chip load constant when an override is applied. When this setting is **ON**, any feedrate override is also applied to the spindle speed, and the spindle overrides are disabled.

145 - Tailstock At Part for Cycle Start

When Setting 145, Tailstock at Part for **[CYCLE START]** is **OFF**, the machine behaves as before. When this setting is **ON**, the tailstock must be pressing against the part at the moment **[CYCLE START]** is pressed or alarm 9109 TAILSTOCK NOT IN PART HOLD POSITION is displayed and the program will not start.

155 - Load Pocket Tables

This setting is used when a software upgrade is performed and/or memory has been cleared and/or the control is re-initialized. In order to replace the contents of the side-mount tool changer pocket tool table with the data from the file, the setting must be **ON**.

If this setting is **OFF** when loading an Offset file from a hardware device, the contents of the **Pocket Tool** table is unaltered. Setting 155 automatically defaults to **OFF** when the machine is turned on.

156 - Save Offsets with Program

When this setting is **ON**, the control includes the offsets in the program file when you save it. The offsets appear in the file before the final % sign, under the heading `O999999`.

When you load the program back into memory, the control prompts *`Load Offsets (Y/N?)`*. Press `Y` if you want to load the saved offsets. Press `N` if you do not want to load them.

158, 159, 160 - X, Y, Z Screw Thermal COMP%

These settings can be set from -30 to +30 and adjust the existing screw thermal compensation by -30% to +30% accordingly.

162 - Default To Float

When this setting is **ON**, the control will interpret the interger code as if it had a decimal point. When the setting is **OFF**, values after address codes that do not include decimal points are taken as machinist's notation; for example, thousandths or ten-thousandths.

	Value entered	With Setting Off	With Setting On
In Inch mode	X-2	X-.0002	X-2.
In MM mode	X-2	X-.002	X-2.

This feature applies to these address codes:

X, Y, Z, A, B, C, E, I, J, K, U, W

Including A and D except when:

- the `A` value (tool angle) is in a `G76` block. If a `G76` A value containing a decimal point is found during program execution, Alarm 605 - Invalid Tool Nose Angle is generated.
- the `D` value is in a `G73` block.

NOTE: *This setting affects the interpretation of all programs. It does not alter the effect of Setting 77 - Scale Integer F.*

163 - Disable .1 Jog Rate

This setting disables the highest jog rate. If the highest jog rate is selected, the next lower rate is automatically selected instead.

165 - Main Spindle SSV Variation (RPM)

Specifies the amount by which to allow the RPM to vary above and below the commanded value during use of the Spindle Speed Variation feature. This must be a positive value.

166 - Main Spindle SSV Cycle

Specifies the duty cycle, or the rate of change of the Main Spindle Speed. This must be a positive value.

191 - Default Smoothness

This setting's value of **ROUGH**, **MEDIUM**, or **FINISH** sets the default smoothness and a maximum corner rounding factor. The control uses this default value unless a G187 command overrides the default.

196 - Conveyor Shutoff

This specifies the amount of time to wait without activity prior to turning off the chip conveyor. Units are minutes.

197 - Coolant Shutoff

This setting is the amount of time to wait without activity before Coolant flow stops. Units are minutes.

199 - Backlight Timer

This setting is the time in minutes after which the machine display backlight turns off when there is no input at the control (except in JOG, GRAPHICS, or SLEEP mode or when an alarm is present). Press any key to restore the screen (**[CANCEL]** is preferred).

216 - Servo and Hydraulic Shutoff

This setting specifies the duration of idle time, in seconds, before Power Save Mode starts. Power Save Mode shuts down all servo motors and hydraulic pumps. The motors and pumps start up again when needed (axis/spindle motion, program execution, etc.).

232 - G76 Default P Code

The default P code value to use when a P code does not exist in a G76 line, or when the P code used has a value less than 1 or greater than 4. Possible values are P1, P2, P3, or P4.

238 - High Intensity Light Timer (minutes)

Specifies the duration in minutes that the High Intensity Light option (HIL) remains turned on when activated. The light turns on when the door is opened and the work light switch is on. If this value is zero, then the light will remain turned on while the doors are open.

239 - Worklight Off Timer (minutes)

Specifies the amount of time in minutes after which the work light will turn off automatically if there are no key presses or **[HANDLE JOG]** changes. If a program is running when the light turns off, the program will continue running.

240 - Tool Life Warning

This value is a percentage of tool life. When tool wear reaches this threshold percentage, the control displays a Tool Wear Warning icon.

241 - Tailstock Hold Force

Force to apply to a part by the servo tailstock (ST-40/45, ST-40L/40L and ST-50/55 only). Unit is pounds-force in standard mode and Newton in metric mode, as per Setting 9.

T9.1: Servo Tailstock Specifications

Min Thrust (Programmable Minimum)	Max Thrust (Programmable Maximum)
1000 lb / 4448 N	4500 lb / 20017 N

242 - Air Water Purge Interval (minutes)

This setting specifies the interval, in minutes, between condensate purges from the system air reservoir.

243 - Air Water Purge On-Time (seconds)

This setting specifies the duration, in seconds, of condensate purges from the system air reservoir.

245 - Hazardous Vibration Sensitivity

This setting has (3) levels of sensitivity for the hazardous vibration accelerometer in the machine's control cabinet: **`Normal`**, **`Low`**, or **`Off`**. The value defaults to **`Normal`** at each machine power-up.

You can see the current g force reading on the **`Gauges`** page in **`Diagnostics`**.

Depending on the machine, vibration is considered hazardous when it exceeds 600 - 1,400 g. At or above the limit, the machine gives an alarm.

If your application tends to cause vibration, you can change Setting 245 to a lower sensitivity to prevent nuisance alarms.

247 - Simultaneous XYZ Motion in Tool Change

Setting 247 defines how the axes move during a tool change. If Setting 247 is **OFF**, the Z Axis retracts first, followed by X- and Y-Axis motion. This feature can be useful in avoiding tool collisions for some fixture configurations. If Setting 247 is **ON**, the axes move simultaneously. This may cause collisions between the tool and the workpiece, due to B- and C-Axis rotations. It is strongly recommended that this setting remain OFF on the UMC-750, due to the high potential for collisions.

250 - Mirror Image C Axis

This is an **ON**/**OFF** setting. When it is **OFF**, axis motions occur normally. When it is **ON**, C-Axis motion may be mirrored (or reversed) around the work zero point. Also, see G101 and Settings 45, 46, 47, 48, and 80.

251 - Subprogram Search Location

This setting specifies the directory to search for external subprograms when the subprogram is not in the same directory as the main program. Also, if the control cannot find an M98 subprogram, the control looks here. Setting 251 has (3) options:

- **Memory**
- **USB Device**
- **Setting 252**

For the **Memory** and **USB Device** options, the subprogram must be in the root directory of the device. For the **Setting 252** selection, Setting 252 must specify a search location to use.

NOTE: *When you use M98:*

- The P code (nnnnn) is the same as the program number (Onnnnn) of the subprogram.
- If the subprogram is not in memory, the file name must be Onnnnn.nc. The file name must contain the O, leading zeros and .nc for the machine to find the subprogram.

252 - Custom Subprogram Search Location

This setting specifies the subprogram search locations when Setting 251 is set to **`Setting 252`**. To make changes to this setting, highlight Setting 252 and press the **[RIGHT]** cursor. The Setting 252 popup explains how to delete and add search paths and lists existing search paths.

To delete a search path:

1. Highlight the path listed in the Setting 252 popup.
2. Press **[DELETE]**.

If there is more than one path to delete, repeat steps 1 and 2.

To set a new path:

1. Press **[LIST PROGRAM]**.
2. Highlight the directory to add.
3. Press **[F3]**.
4. Select **`Setting 252 add`** and press **[ENTER]**.

To add another path, repeat steps 1 through 4.

NOTE: *When you use `M98`:*

- The `P` code (`nnnnn`) is the same as the program number (`Onnnnn`) of the subprogram.
- If the subprogram is not in memory, the file name must be `Onnnnn.nc`. The file name must contain the O, leading zeros and `.nc` for the machine to find the subprogram.

253 - Default Graphics Tool Width

If this setting is **ON**, Graphics mode uses default tool width (a line) [1]. If this setting is **OFF**, Graphics mode uses the Tool Offset Diameter Geometry specified in the **Tool Offsets** table as the graphics tool width [2].

F9.10: Graphics Display with Setting 253 On [1] and Off [2].

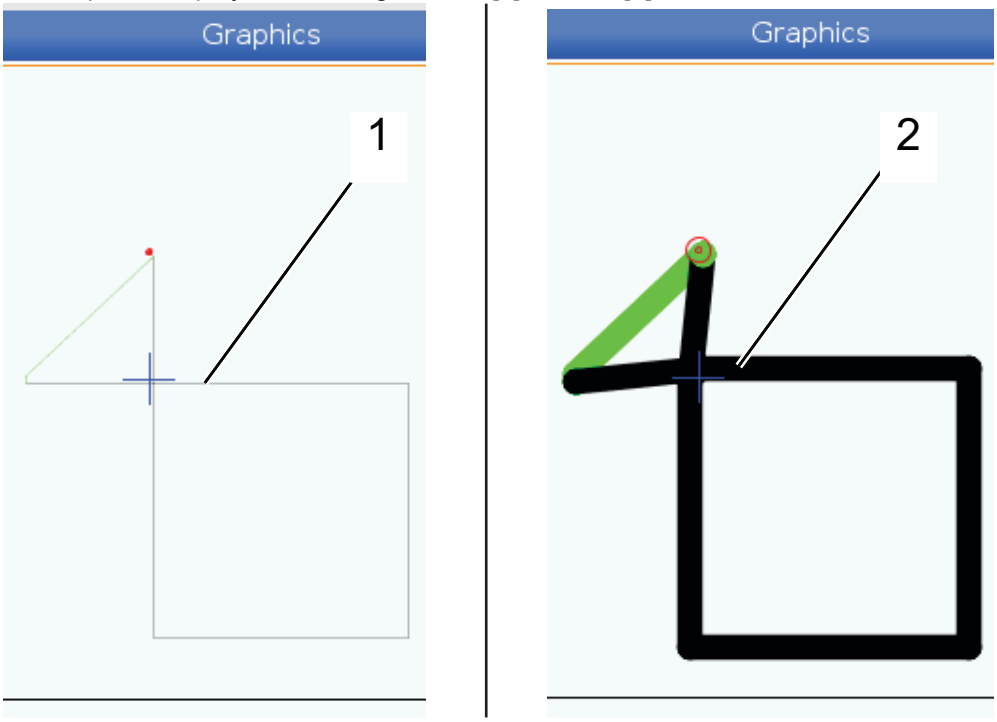

261 - DPRNT Store Location

DPRNT is a macro function that lets the machine control communicate with external devices. The Next-Generation Control (NGC) lets you output DPRNT statements over a TCP network, or to a file.

Setting 261 lets you specify where the DPRNT statement output goes:

- **Disabled** - The control does not process DPRNT statements.
- **File** - The control outputs DPRNT statements to the file location specified in setting 262.
- **TCP Port** - The control outputs DPRNT statements to the TCP port number specified in setting 263.

262 - DPRNT Destination File Path

DPRNT is a macro function that lets the machine control communicate with external devices. The Next-Generation Control (NGC) lets you output DPRNT statements to a file, or over a TCP network.

If setting 261 is set to **`File`**, setting 262 lets you specify the file location where the control sends DPRNT statements.

263 - DPRNT Port

DPRNT is a macro function that lets the machine control communicate with external devices. The Next-Generation Control (NGC) lets you output DPRNT statements over a TCP network.

If setting 261 is set to **`TCP Port`**, setting 263 lets you specify the TCP port where the control sends DPRNT statements. On the PC, you can use any terminal program that supports TCP.

Use the port value along with the machine's IP address in the terminal program to connect to the machine's DPRNT stream. For example, if you use the terminal program PUTTY:

1. In the basic options section, type the machine's IP address and the port number in Setting 263.
2. Select the Raw or Telnet connection type.
3. Click "Open" to start the connection.

F9.11: PUTTY can save these options for subsequent connections. To keep the connection open, select "Enable TCP keepalives" in the "Connection" options.

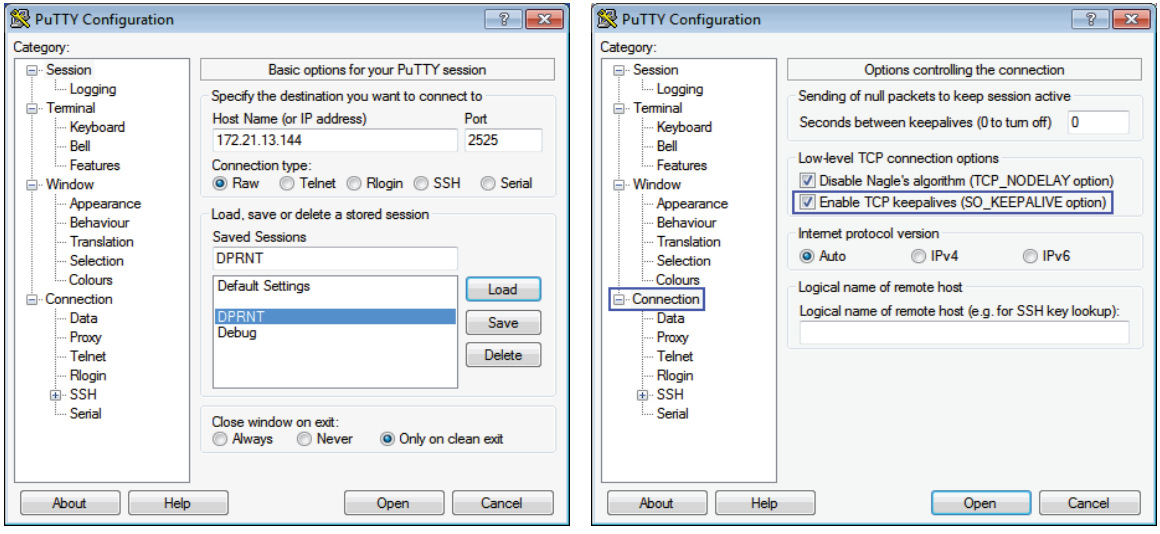

To check the connection, type ping in the PUTTY terminal window and press enter. The machine sends a pingret message if the connection is active. You can establish up to (5) simultaneous connections at a time.

264 - Autofeed Step Up

While autofeed is active, this setting defines the percentage amount by which the feedrate increments after tool overload stops.

265 - Autofeed Step Down

When autofeed is active, this setting defines the percentage amount by which the feedrate decrements during a tool overload.

266 - Autofeed Minimum Override

This setting defines the minimum percentage to which autofeed can reduce the feedrate.

267 - Exit Jog Mode after Idle Time

This setting defines the maximum duration, in minutes, that the control remains in jog mode with no axis motion or keyboard activity. After this duration, the control automatically changes to **`MDI`** mode. A value of zero disables this automatic change to **`MDI`** mode from jog mode.

268 - Second Home Position X

This setting defines the X-Axis position for second home, in inches or millimeters. The value is limited by the travel limits for the specific axis.

Press the **[ORIGIN]** button to set this setting to inactive or set the complete group to inactive.

NOTE: *This setting is in the* **`User Positions`** *tab under* **`Settings`**. *Refer to the tab description on page* ***479*** *for more information.*

CAUTION: *Incorrectly set user positions can cause machine crashes. Set user positions with caution, especially after you have changed your application in some way (new program, different tools, etc.). Verify and change each axis position separately.*

269 - Second Home Position Y

This setting defines the Y-Axis position for second home, in inches or millimeters. The value is limited by the travel limits for the specific axis.

Press the **[ORIGIN]** button to set this setting to inactive or set the complete group to inactive.

NOTE: *This setting is in the* **`User Positions`** *tab under* **`Settings`**. *Refer to the tab description on page* ***479*** *for more information.*

CAUTION: *Incorrectly set user positions can cause machine crashes. Set user positions with caution, especially after you have changed your application in some way (new program, different tools, etc.). Verify and change each axis position separately.*

270 - Second Home Position Z

This setting defines the Z-Axis position for second home, in inches or millimeters. The value is limited by the travel limits for the specific axis.

Press the **[ORIGIN]** button to set this setting to inactive or set the complete group to inactive.

NOTE: *This setting is in the* **`User Positions`** *tab under* **`Settings`**. *Refer to the tab description on page* ***479*** *for more information.*

CAUTION: *Incorrectly set user positions can cause machine crashes. Set user positions with caution, especially after you have changed your application in some way (new program, different tools, etc.). Verify and change each axis position separately.*

276 - Workholding Input Number

This setting specifies the input number to monitor for workholding fixture clamping. If the control receives a spindle start command while this input indicates that the workholding is not clamped, the machine gives an alarm.

277 - Axis Lubrication Interval

This setting defines the interval, in hours, between cycles for the axis lubrication system. The minimum value is 1 hour. The maximum value is between 12 and 24 hours, depending on the machine model.

281 - Chuck Foot Pedal Lockout

This is an **ON**/**OFF** setting. When it is **OFF**, the chuck foot pedal operates normally. When it is **ON**, any action at the foot pedal is ignored by the control.

282 - Main Spindle Chuck Clamping

This setting determines the Main Spindle chuck clamping direction. Set to O.D., the chuck is considered clamped when the jaws are moved to the spindle center. Set to I.D., the chuck is considered clamped when the jaws are moved away from the spindle center.

283 - Main Spindle Chuck Unclamp RPM

This setting determines the maximum main spindle speed for unclamping the chuck. The RPM at which the chuck will not operate. If the main spindle is spinning faster than this value the chuck will not open. If the main spindle is spinning slower than this value the chuck will open.

284 - Cycle Start Allowed With Chuck Unclamped

This setting allows **[CYCLE START]** to function with the chuck unclamped.

285 - X Diameter Programming

This setting sets diameter for programming. When this setting is set to TRUE, it interprets inputs as diameter instead of radius.

286 - Canned Cycle Cut Depth

Used with canned cycles `G71` and `G72`, this setting specifies the incremental depth for each pass during rough cutting. It is used if the programmer does not specify a `D` code. The default value is 0.100 inches.

287 - Canned Cycle Retraction

Used with canned cycles `G71` and `G72`, this setting specifies the retraction amount after a roughing cut. It represents the tool to material clearance as the tool returns for another pass.

289 - Thread Finish Allowance

Used in `G76` canned threading cycle, this setting specifies how much material is left on the thread for the final pass of the cycle.

291 - Main Spindle Speed Limit

This setting defines a top speed for the main spindle. When this setting has a nonzero value, the spindle will never exceed the designated speed.

292 - Door Open Spindle Speed Limit

This setting specifies the maximum spindle speed allowed while the machine door is open.

306 - Minimum Chip Clear Time

This setting specifies the minimum amount of time, in seconds, that the spindle remains at “chip clean speed” (the spindle RPM designated in a canned cycle E command). Add time to this setting if your commanded chip clean cycles do not completely remove the chips from the tool.

313, 314, 315 - Max User Travel Limit X, Y, Z

This setting lets you define a custom travel limit position for the X, Y, and Z axis.

Press the **[ORIGIN]** button to set this setting to inactive or set the complete group to inactive.

NOTE: *This setting is in the* **`User Positions`** *tab under* **`Settings`**. *Refer to the tab description on page* ***479*** *for more information.*

319 - VDI Spindle Center Line X

This setting lets you define the machine position which aligns the center of the VDI tool holder with the center of the spindle.

NOTE: *This setting is in the* **`User Positions`** *tab under* **`Settings`**

320 - BOT Spindle Center Line X

This setting lets you define the machine position which aligns the center of the BOT tool holder with the center of the spindle.

NOTE: *This setting is in the* **`User Positions`** *tab under* **`Settings`**

321 - Spindle Center Line Y

This setting lets you define the machine position which aligns the center of the tool holders with the center of the spindle for the Y Axis.

NOTE: *This setting is in the* **`User Positions`** *tab under* **`Settings`**

322 - Foot Pedal Tailstock Alarm

When `M21` is used to move the tailstock to the hold point and hold a part, the control generates an alarm if a part is not found and the hold point is reached. Setting 322 can be switched to **`ON`** and an alarm is generated when the foot pedal is used to move the tailstock to the hold point and no part is found.

323 - Disable Notch Filter

When this setting is **`On`**, the notch filter values are set to zero. When this setting is **`Off`**, it uses the default values of the machine as set defined by parameters. Turning this setting **`On`** will improve circular accuracy and turning **`Off`** will improve surface finish.

NOTE: *You must cycle power for this setting to take effect.*

325 - Manual Mode Enabled

Turning this setting **`ON`** allows the axes to be jogged without zero returning the machine (finding machine home).

The jog limits imposed by setting 53 Jog W/O Zero Return will not apply. The jog rate will be defined by the eWheel switch or the jog rate buttons (if the eWheel is not connected).

With this setting **`ON`** you can perform tool changes using the **[ATC FWD]** or **[ATC REV]** buttons.

When turning this setting **`OFF`** the machine will operate as normal, and will require to be zero return.

326 - Graphics X Zero Location

This setting locates the top of the zoom window relative to the machine X zero position (see the Graphics section). Its default is zero.

327 - Graphics Z Zero Location

This setting locates the top of the zoom window relative to the machine Z zero position (see the Graphics section). Its default is zero.

328 - eHandwheel Rapid Limit

This setting allows you to limit how fast the eHandwheel moves when you press and hold down the rapid button. A value of zero disables the button.

329 - Main Spindle Jog Speed

This setting determines the spindle RPM for the spindle Jog key.

330 - MultiBoot Selection Time out

This is a simulator only setting. When a simulator is powered on, it displays a screen from where different simulator models can be chosen. This setting sets how long that screen is shown. If the user does nothing before the time expires, the software will load the last active simulator configuration.

331 - Sub Spindle Jog Speed

This setting determines the spindle rpm for the spindle jog key.

332 - Tailstock Foot Pedal LockOut

This is an **ON/OFF** setting. When it is **OFF**, the tailstock foot pedal operates normally. When it is **ON**, any action at the tailstock foot pedal is ignored by the control.

333, 334 - Probe Offset Z+, Z-

These settings are used to define the displacement and size of the ATP. These four settings (59, 60, 333, 334) specify the travel distance and direction from where the probe is triggered to where the actual sensed surface is located.

For more information on how to calibrate the ATP refer to page **219**.

These settings are used by the `G31` code. The values entered for each setting must be positive numbers.

Macros can be used to access these settings, see the Macro section for more information.

F9.12: 59/60/333/334 Tool Probe Offset:[1] Chuck, [2] Part, [3] Probe, [#59] Setting 59, [#60] Setting 60, [#333] Setting 333, [#334] Setting 334,

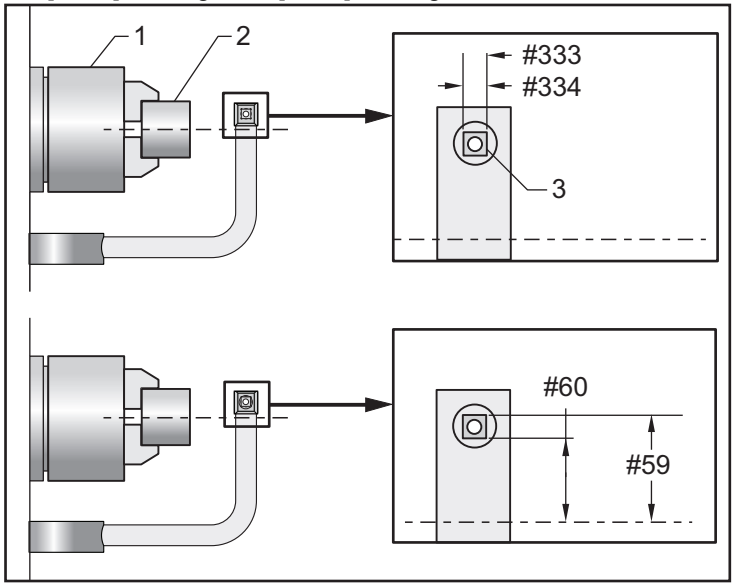

335 - Linear Rapid Mode

This setting can be set to one of two modes. The description of these modes is as follows:

NONE The individual axis rapid to their endpoints independently of each other.

LINEAR (XYZ) The XYZ axes, when commanded to rapid, move linearly through 3D space. All other axis rapid with independent speeds/accelerations.

NOTE: *All modes cause a program to run in the same amount of time (no increase or decrease in execution time).*

336 - Bar Feeder Enable

This setting turns on the Bar Feeder tab in **[CURRENT COMMANDS]** under the **Devices** Tab. Use this page to set up the Bar Feeder.

337, 338, 339 - Safe Tool Change Location X, Y, Z

These settings let you define a safe position for the X, Y and Z axis at a tool change command, before the axes go to their final tool change positions. Use this position to avoid collisions with fixtures, tailstock, and other potential obstacles. The control uses this position for every tool change, no matter how it is commanded (M06, **[NEXT TOOL]**, etc.)

CAUTION: *Incorrectly set user positions can cause machine crashes. Set user positions with caution, especially after you have changed your application in some way (new program, different tools, etc.). Verify and change each axis position separately.*

340 - Chuck Clamp Delay Time

The dwell time that is allowed after clamping the chuck (an M10 command). Program execution will not continue until this time has expired.

341 - Tailstock Rapid Position

This is the point where the tailstock will change from rapid to feed movement when moving toward the part. This setting should be a negative value.

F9.13: Tailstock Rapid Position

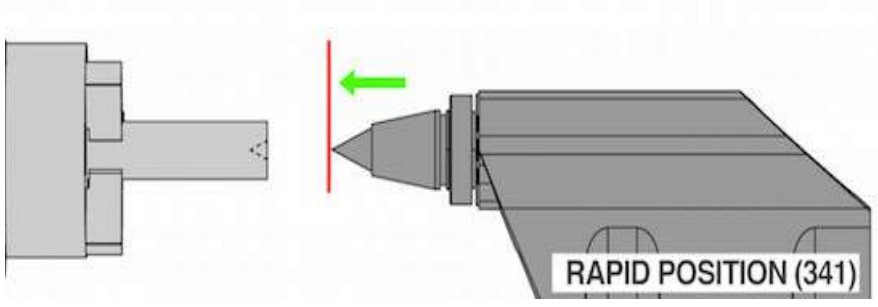

NOTE: *This setting is in the* `User Positions` *tab under* `Settings`

342 - Tailstock Advance Distance

This setting is the distance from the Tailstock Rapid Position to a point just inside the part.

To determine the value for this setting:

- Jog the tailstock to the part face

- Subtract current position from the Retract Position to get the distance from the Retract Position to the part face
- Then add 0.375 – 0.500” (9.5 – 12.7mm)

The machine will use this setting to calculate a target position inside the part, relative to the Rapid Position (Setting 341).

F9.14: Tailstock Advance Distance

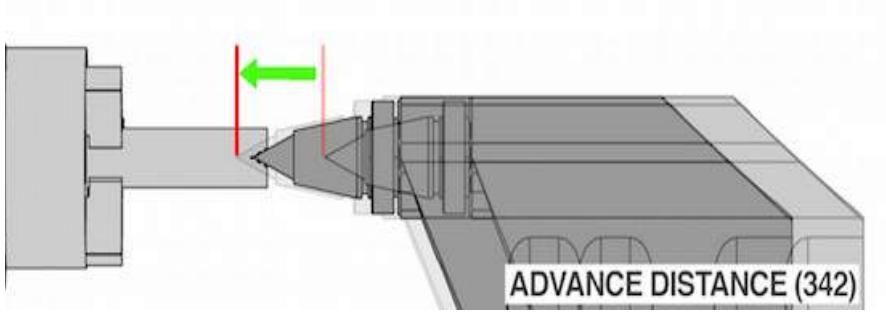

NOTE: *This setting is in the* **`User Positions`** *tab under* **`Settings`**

343 - Sub Spindle SSV Variation (RPM)

Specifies the amount by which to allow the RPM to vary above and below the commanded value during use of the Sub Spindle Speed Variation feature. This must be a positive value.

344 - Sub Spindle SSV Cycle

Specifies the duty cycle, or the rate of change of the Sub Spindle Speed. This must be a positive value.

345 - Sub Spindle Chuck Clamping

This setting determines the Sub Spindle chuck clamping direction. Set to O.D., the chuck is considered clamped when the jaws are moved to the sub spindle center. Set to I.D., the chuck is considered clamped when the jaws are moved away from the sub spindle center.

346 - Sub Spindle Chuck Unclamp RPM

This setting determines the maximum sub spindle speed for unclamping the chuck. The RPM at which the chuck will not operate. If the sub spindle is spinning faster than this value the chuck will not open. If the sub spindle is spinning slower than this value the chuck will open.

347 - Live Tooling SSV Variation (RPM)

Specifies the amount by which to allow the RPM to vary above and below the commanded value during use of the Live Tooling Speed Variation feature. This must be a positive value.

348 - Live Tooling SSV Cycle

Specifies the duty cycle, or the rate of change of the Live Tooling Speed. This must be a positive value.

349 - Live Tooling Chuck Clamping

This setting determines the Live Tooling clamping direction. Set to O.D., the chuck is considered clamped when the jaws are moved to the Live Tooling center. Set to I.D., the chuck is considered clamped when the jaws are moved away from the Live Tooling center.

350 - Live Tooling Chuck Unclamp RPM

This setting determines the maximum Live Tooling speed for unclamping the chuck. The RPM at which the chuck will not operate. If the Live Tooling is spinning faster than this value the chuck will not open. If the Live Tooling is spinning slower than this value the chuck will open.

352 - Live Tooling Speed Limit

This setting defines a top speed for the Live Tooling. When this setting has a nonzero value, the Live Tooling will never exceed the designated speed.

355 - Sub Spindle Speed Limit

This setting defines a top speed for the Sub Spindle. When this setting has a nonzero value, the Sub Spindle will never exceed the designated speed.

356 - Beeper Volume

This setting allows the user to control the volume of the beeper located on the control pendant. Setting a value of 0 will turn OFF the beeper. A value of 1 to 255 can be used.

NOTE: *This setting will only affect the pendant beeper, not any pallet change or other beeper. Hardware limitation may prevent adjustment of the volume other than On/Off.*

357 - Warmup Compensation Cycle Start Idle Time

This setting defines an appropriate idle time, in hours, for warmup compensation to be restarted. When a machine has been idle longer than the amount of time in this setting, a **[CYCLE START]** will ask the user if he wishes to apply warmup compensation.

If the user answers with **[Y]** or **[ENTER]**, warmup compensation is applied a new, just as if the machine was powered up and **[CYCLE START]** commences. An **[N]** answer will continue cycle start with no warmup compensation. The next opportunity to apply warmup compensation will be after the setting 357 period has elapsed.

358 - Steady Rest Clamp/Unclamp Delay Time

The dwell time that is allowed after clamping the steady rest (an M146 command). Program execution will not continue until this time has expired.

359 - SS Chuck Clamp Delay Time

The dwell time that is allowed after clamping the secondary spindle chuck (an M110 command). Program execution will not continue until this time has expired.

360 - Steady Rest Foot Pedal Lockout

This is an **ON**/**OFF** setting. When it is **OFF**, the steady rest foot pedal operates normally. When it is **ON**, any action at the foot pedal is ignored by the control.

361 - Bar Pusher Vent Time

This setting specifies the amount of time the Bar Pusher will vent after it has been commanded to unclamp.

368 - Live Tooling Type

This settings allows you to drive axial or radial tools to perform canned cycles operations as milling, drilling, or slotting. These are the choices for this setting:

1. None- Both radial and axial live tooling commands are allowed.
2. Axial- Alarm 9111 INVALID G CODE FOR LIVE TOOL TYPE will be generated if you perform an Radial live tooling canned cycle operation.
3. Radial- Alarm 9111 INVALID G CODE FOR LIVE TOOL TYPE will be generated if you perform an Axial live tooling canned cycle operation.

372 - Parts Loader Type

This setting turns on the Automatic Parts Loader (APL) in **[CURRENT COMMANDS]** under the Devices tab. Use this page to set up the APL.

DANGER: *If you turn this setting* **[OFF]**, *the AW - axis will drop if not supported or disconnected. Do one of the following:*

- Jog to a safe location
- Unplug all APL cables BERFORE releasing E-STOP
- Unplug AW brake BEFORE releasing E-STOP

375 - APL Gripper Type

This setting chooses the type of gripper attached to the Automatic Parts Loader (APL).

APL Gripper has the functionality of gripping raw and finished parts on an outer diameter or inner diameter, in addition to being able to swap between them.

376 - Light Curtain Enable

This setting enables the Light Curtain. When the Light Curtain is enabled, it will prevent APL motion if it detects something in an area too close to the APL axes.

If the light curtain beam is obstructed the machine will go into a Light Curtain Hold condition; the CNC program will continue to run and the machine's spindle and axes will continue to move but the AU, AV and AW axes will not move. The machine will remain in Light Curtain Hold until the light curtain beam is unobstructed and the Cycle Start button is pressed.

F9.15: Light curtain Icon Display

When the light curtain beam is obstructed the machine will go into a Light Curtain Hold condition and the Light Curtain icon will appear on the screen. The icon will disappear when the beam is no longer obstructed.

NOTE: *You can operate the machine in standalone mode with the light curtain disabled. But the light curtain must be enabled in order to run the APL.*

377 - Negative Work Offset

This setting selects the use of work offsets in the negative direction.

Set this setting to On to use negative work offsets to move the axis away from the home position. If set to OFF, then you must use positive work offsets to move the axes away from home position.

378 - Safe Zone Calibrated Geometry Reference Point X

This setting defines the Safe Zone Calibrated Geometry Reference Point in the X-axis.

379 - Safe Zone Calibrated Geometry Reference Point Y

This setting defines the Safe Zone Calibrated Geometry Reference Point in the Y-axis.

380 - Safe Zone Calibrated Geometry Reference Point Z

This setting defines the Safe Zone Calibrated Geometry Reference Point in the Z-axis.

381 - Enable Touchscreen

This setting enables the touchscreen feature on machines built with a touchscreen. If the machine does not have a touch screen a alarm message will be generated at power on.

383 - Table Row Size

This settings allows you to resize the rows, when using the touchscreen feature.

396 - Enable / Disable Virtual Keyboard

This settings allows you to use a virtual keyboard on the screen, when using the touchscreen feature.

397 - Press and Hold Delay

This settings allows you to set the hold delay before the a pop shows up.

398 - Header Height

This setting adjust the header height for the pop-ups and display boxes.

399 - Tab Height

This setting adjust the height of the tabs.

403 - Change Popup Button Size

This settings allows you to resize the popup buttons, when using the touchscreen feature.

409 - Default Coolant Pressure

Some machine models are equipped with a variable frequency drive that allows the coolant pump to operate in different coolant pressures. This settings specifies the default coolant pressure when `M08` is commanded. The choices are:

- 0 - Low Pressure
- 1 - Normal Pressure
- 2 - High Pressure

NOTE: *A P code can be used with M08 to specify the desired coolant pressure. Refer to the M08 Coolant On section for more information.*

410 - Safe Tool Change Location B

These settings let you define a safe position for the B axis at a tool change command, before the axes go to their final tool change positions. Use this position to avoid collisions with fixtures, tailstock, and other potential obstacles. The control uses this position for every tool change, no matter how it is commanded (M06, **[NEXT TOOL]**, etc.)

CAUTION: *Incorrectly set user positions can cause machine crashes. Set user positions with caution, especially after you have changed your application in some way (new program, different tools, etc.). Verify and change each axis position separately.*

413 - Main Spindle Load Type

This setting makes the main spindle performance consistent across different loads. The choices are:

- Low - Recommended when using a collet chuck on the spindle.
- Medium - Recommended when using a standard size chuck.
- High - Recommend when using a large size chuck.

414 - Sub Spindle Load Type

This setting makes the sub-spindle performance consistent across different loads. The choices are:

- Low - Recommended when using a collet chuck.
- Medium - Recommended when using the standard chuck.
- High - Recommend when using a large chuck than was purchased with the machine.

415 - Live Tool Load Type

This setting makes the Live Tool spindle performance consistent across different loads. The choices are:

- Low - Small Size Loads
- Medium - Medium Size Loads.
- High - Large Size Loads.

416 - Media Destination

This setting allows the user to view media files on a external monitor via the HDMI output on the Main Control PCB.

When this setting is to 0: Built-In Monitor the machine will behave as normal.

When this setting is set to 1: External Monitor a message “See External Monitor” will be displayed on the Media tab.

417 - Chuck Unclamp Delay Time

This is the dwell time that is allowed after unclamping the chuck (an M11 command).

418 - SS Chuck Unclamp Delay Time

This is the dwell time that is allowed after unclamping the secondary spindle chuck (an M111 command).

9.2 Network Connection

You can use a computer network through a wired connection (Ethernet) or a wireless connection (WiFi) to transfer program files to and from your Haas machine, and to let multiple machines access files from a central network location. You can also set up Net Share to quickly and easily share programs between the machines in your shop and the computers on your network.

To access the Network page:

1. Press **[SETTING]**.
2. Select the **Network** tab in the tabbed menu.

3. Select the tab for the network settings (**`Wired Connection`**, **`Wireless Connection`**, or **`Net Share`**) that you want to set up.

F9.16: Wired Network Settings Page Example

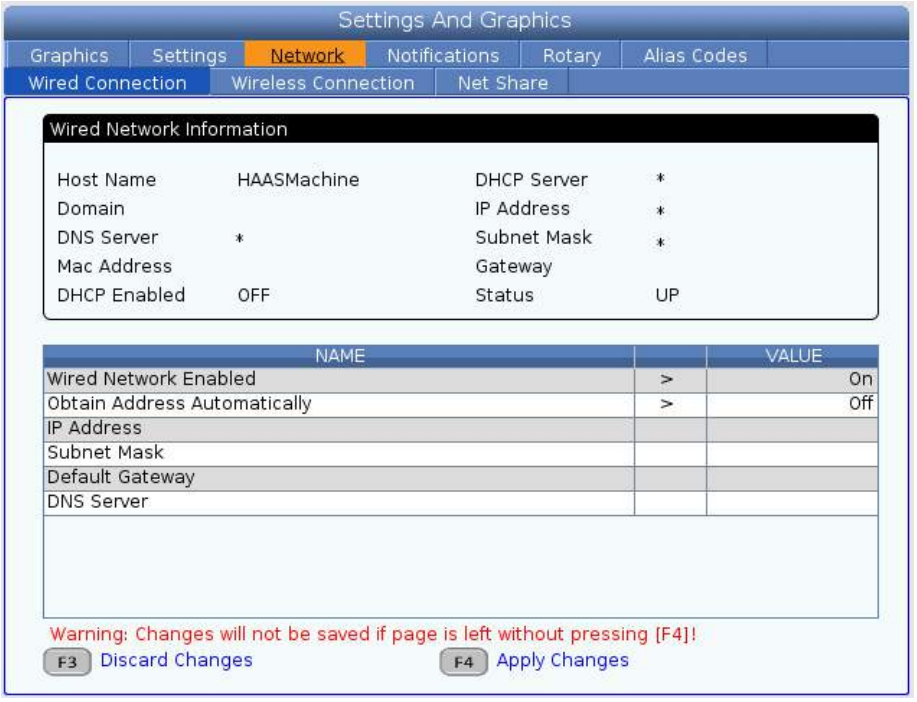

NOTE: *Settings with a* **>** *character in the second column have preset values that you select from. Press the* **[RIGHT]** *cursor arrow key to see the list of options. Use the* **[UP]** *and* **[DOWN]** *cursor arrow keys to choose an option, and then press* **[ENTER]** *to confirm your choice.*

9.2.1 Network Icon Guide

The control screen shows icons to quickly give you information about the machine network status.

Icon	Meaning
	The machine is connected to the Internet via a wired network with an Ethernet cable.
	The machine is connected to the Internet via a wireless network and has 70 - 100% signal strength.
	The machine is connected to the Internet via a wireless network and has 30 - 70% signal strength.
	The machine is connected to the Internet via a wireless network and has 1 - 30% signal strength.
	The machine was connected to the Internet via a wireless network and is not receiving any data packets.

Icon	Meaning
	The machine is successfully registered with HaasConnnect and is communicating with the server.
	The machine had previously registered with HaasConnect and has a problem connecting to the server.
	The machine is connected to a remote Netshare.

9.2.2 Network Connection Terms and Responsibilities

Networks and operating systems are different from company to company. When your HFO Service Technician installs your machine, they can attempt to connect it to your network with your information, and they can troubleshoot connection problems with the machine itself. If the problem is with your network, you need a qualified IT service provider to assist you, at your expense.

If you call your HFO for help with network problems, remember that the technician can help only as far as the machine software and networking hardware.

F9.17: Network Responsibility Diagram: [A] Haas Responsibility, [B] Your Responsibility, [1] Haas Machine, [2] Haas Machine Network Hardware, [3] Your Server, [4] Your computer(s).

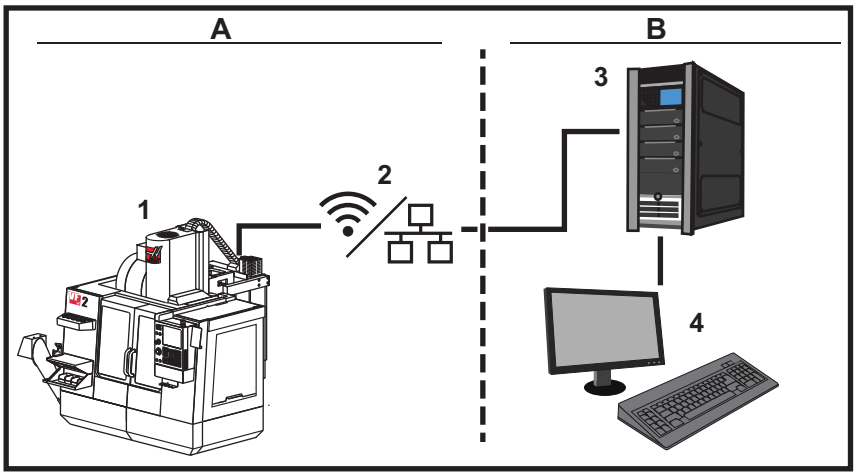

9.2.3 Wired Connection Setup

Before you begin, ask your network administrator if your network has a Dynamic Host Configuration Protocol (DHCP) server. If it does not have a DHCP server, collect this information:

- The IP address that your machine will use on the network
- The Subnet Mask address
- The Default Gateway address
- The DNS Server name

1. Connect an active Ethernet cable to the Ethernet port on your machine.
2. Select the **Wired Connection** tab in the **Network** tabbed menu.
3. Change the **Wired Network Enabled** setting to ON.
4. If your network has a DHCP server, you can let the network assign an IP address automatically. Change the **Obtain Address Automatically** setting to **ON**, and then press **[F4]** to complete the connection. If your network does not have a DHCP server, go to the next step.
5. Type the machine's **IP Address**, the **Subnet Mask** address, the **Default Gateway** address, and the **DNS Server** name into their respective fields.
6. Press **[F4]** to complete the connection, or press **[F3]** to discard your changes.

After the machine successfully connects to the network, the **Status** indicator in the **Wired Network Information** box changes to **UP**.

9.2.4 Wired Network Settings

Wired Network Enabled - This setting activates and deactivates wired networking.

Obtain Address Automatically - Lets the machine retrieve an IP address and other network information from the network's Dynamic Host Configuration Protocol (DHCP) server. You can use this option only if your network has a DHCP server.

IP Address - The machine's static TCP/IP address on a network without a DHCP server. Your network administrator assigns this address to your machine.

Subnet Mask - Your network administrator assigns the subnet mask value for machines with a static TCP/IP address.

Default Gateway - An address to gain access to your network through routers. Your network administrator assigns this address.

DNS Server - The name of the Domain Name Server or DHCP server on the network.

NOTE: *The address format for Subnet Mask, Gateway, and DNS is XXX.XXX.XXX.XXX. Do not end the address with a period. Do not use negative numbers. 255.255.255.255 is the highest possible address.*

9.2.5 Wireless Connection Setup

This option lets your machine connect to a 2.4 GHz, 802.11b/g/n wireless network. 5 GHz is not supported.

Wireless network setup uses a wizard to scan for available networks and then set up the connection with your network information.

Before you begin, ask your network administrator if your network has a Dynamic Host Configuration Protocol (DHCP) server. If it does not have a DHCP server, collect this information:

- The IP address that your machine will use on the network
- The Subnet Mask address
- The Default Gateway address
- The DNS Server name

You also need this information:

- The SSID for your wireless network
- The password to connect to your secured wireless network

1. Select the **Wireless Connection** tab in the **Network** tabbed menu.
2. Press **[F2]** to scan for available networks.

The Connection Wizard displays a list of available networks, with their signal strengths and security types. The control supports 64/128 WEP, WPA, WPA2,TKIP, and AES security types.

F9.18: Connection Wizard List Display. [1] Current Active Network Connection (if any), [2] Network SSID, [3] Signal Strength, [4] Security Type.

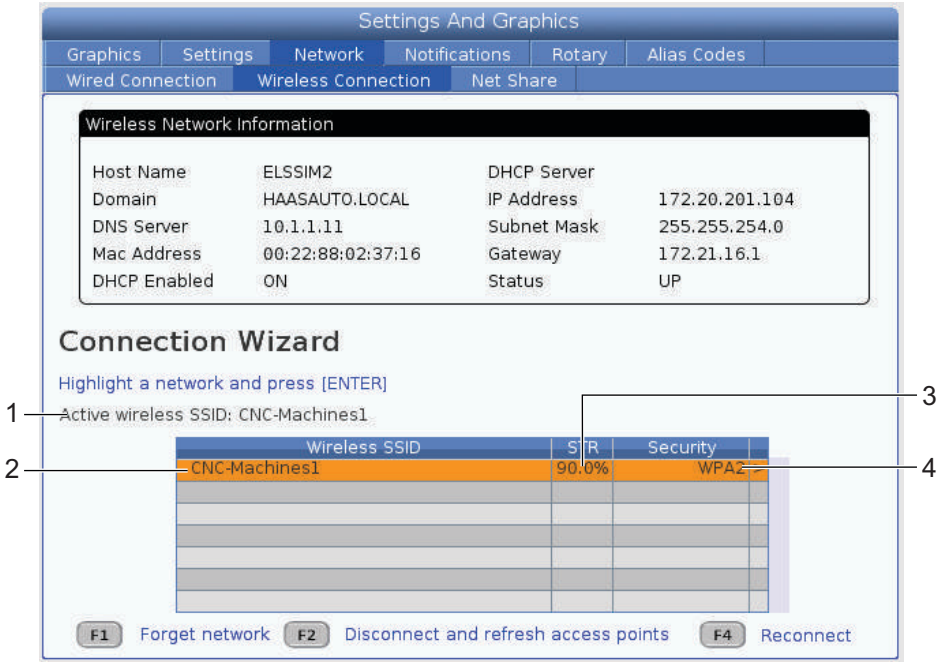

3. Use the cursor arrow keys to highlight the network you want to connect to.
4. Press **[ENTER]**.

   The network settings table appears.

F9.19: Network Settings Table. [1] Password Field, [2] DHCP Enable / Disable. Further options appear when you turn the DHCP Setting OFF.

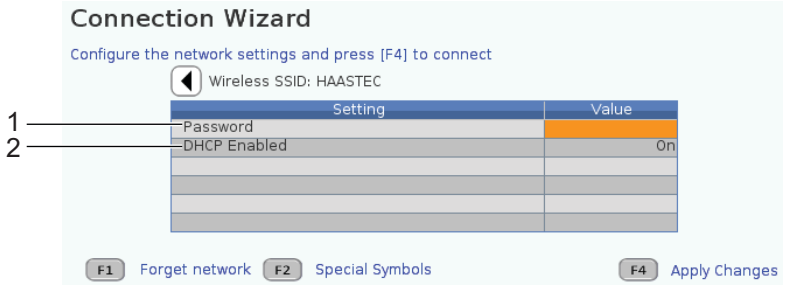

5. Type the access point password in the **`Password`** field.

NOTE: *If you need special characters such as underscores (_) or carets (^) for the password, press* **[F2]** *and use the menu to select the special character you need.*

6. If your network does not have a DHCP server, change the **`DHCP Enabled`** setting to **`OFF`** and type the IP Address, Subnet Mask, Default Gateway, and DNS Server Address into their respective fields.
7. Press **[F4]** to complete the connection, or press **[F3]** to discard your changes.

After the machine successfully connects to the network, the **`Status`** indicator in the **`Wired Network Information`** box changes to **`UP`**. The machine will also automatically connect to this network when it is available, unless you press F1 and confirm to “forget” the network.

The possible status indicators are:

- UP - The machine has an active connection to a wireless network.
- DOWN - The machine does not have an active connection to a wireless network.
- DORMANT - The machine is waiting for an external action (typically, waiting for authentication with the wireless access point).
- UNKNOWN - The machine cannot determine the connection status. A bad link or incorrect network configuration can cause this. You may also see this status while the machine transitions between statuses.

Wireless Network Function Keys

Key	Description
F1	**`Forget network`** - Highlight a network and press **[F1]** to remove all connection information and prevent automatic reconnection to this network.
F2	**`Scan for network`** and **`Disconnect and refresh access points`** - In the network selection table, press **[F2]** to disconnect from the current network and scan for available networks. **`Special Symbols`** - In the wireless network settings table, use **[F2]** to access special characters, such as carets or underscores, for password entry.
F4	**`Reconnect`** - Connect again to a network the machine was previously connected to. **`Apply Changes`** - After you make changes to settings for a particular network, press **[F4]** to save the changes and connect to the network.

9.2.6 Wireless Network Settings

Wireless Network Enabled - This setting activates and deactivates wireless networking.

Obtain Address Automatically - Lets the machine retrieve an IP address and other network information from the network's Dynamic Host Configuration Protocol (DHCP) server. You can use this option only if your network has a DHCP server.

IP Address - The machine's static TCP/IP address on a network without a DHCP server. Your network administrator assigns this address to your machine.

Subnet Mask - Your network administrator assigns the subnet mask value for machines with a static TCP/IP address.

Default Gateway - An address to gain access to your network through routers. Your network administrator assigns this address.

DNS Server - The name of the Domain Name Server or DHCP server on the network.

NOTE: *The address format for Subnet Mask, Gateway, and DNS is XXX.XXX.XXX.XXX. Do not end the address with a period. Do not use negative numbers. 255.255.255.255 is the highest possible address.*

Wireless SSID - The name of the wireless access point. You can enter this manually, or you can press the LEFT or RIGHT cursor arrow keys to select from a list of available networks. If your network does not broadcast its SSID, you must enter this manually.

Wireless Security - The security mode that your wireless access point uses.

Password - The password for the wireless access point.

9.2.7 Net Share Settings

Net Share lets you connect remote computers to the machine control over the network, to transfer files to and from the machine's User Data directory. These are the settings you need to adjust to set up Net Share. Your network administrator can give you the correct values to use. You must enable remote sharing, local sharing, or both to use Net Share.

After you change these settings to the correct values, press **[F4]** to begin Net Share.

NOTE: *If you need special characters such as underscores (_) or carets (^) for these settings, refer to page **66** for instructions.*

CNC Network Name - The name of the machine on the network. The default value is **HAASMachine**, but you must change this so that each machine on the network has a unique name.

Domain / Workgroup Name - The name of the domain or workgroup the machine belongs to.

Remote Net Share Enabled - When this is **ON**, the machine shows the contents of the shared network folder in the **Network** tab in the Device Manager.

Remote Server Name - The remote network name or IP address of the computer that has the share folder.

Remote Share Path - The name and location of the shared remote network folder.

NOTE: *Do not use spaces in the shared folder name.*

Remote User Name - The name to use to log in to the remote server or domain. User names are case-sensitive and cannot contain spaces.

Remote Password - The password to use to log in to the remote server. Passwords are case-sensitive.

Remote Share Connection Retry - This setting adjust the Remote NetShare connection retry behavior.

NOTE: *The higher levels of this setting can cause intermittent user interface to freeze. If not using Wi-Fi connection all the time always set this setting to* **Relaxed***.*

Local Net Share Enabled - When this is ON, the machine allows access to the **User Data** directory to computers on the network (password required).

Local User Name - Displays the user name to log into the control from a remote computer. The default value is **haas**; you cannot change this.

Local Password - The password for the user account on the machine.

NOTE: *You need the local user name and password to access the machine from an outside network.*

Net Share Example

In this example, you have established a net share connection with the **Local Net Share Enabled** setting turned **ON**. You want to view the contents of the machine's **User Data** folder on a networked PC.

NOTE: *This example uses a Windows 7 PC; your configuration may vary. Ask your network administrator for help if you cannot establish a connection.*

1. On the PC, click the START menu and select the RUN command. You can also hold the Windows key and press R.
2. At the Run prompt, type (2) backslashes (\\) and then the machine's IP address or CNC Network Name.
3. Click OK or press Enter.
4. Type the machine's **Local User Name** (haas) and **Local Password** in the appropriate fields, and then click OK or press Enter.
5. A window appears on the PC with the machine's **User Data** folder displayed. You can interact with the folder as you would with any other Windows folder.

NOTE: *If you use the machine's CNC Network Name instead of the IP address, you may need to type a backslash before the User Name (*`\haas`*). If you cannot change the username in the Windows prompt, select the "Use another account" option first.*

9.2.8 Haas Drop

The HaasDrop application is used for sending files from a iOs or Android device to the control (NGC) on a Haas Machine.

The procedure is located on the website click on the following link:. Haas Drop - Help

You can also scan the code below with your mobile device to go directly to the procedure

9.2.9 Haas Connect

HaasConnect is a web-based application that lets you monitor your shop with a web browser or mobile device. To use HaasConnect, you set up an account at myhaascnc.com, add users and machines, and designate the alerts you want to receive. For more information about HaasConnect, go to www.haascnc.comor scan the QR code below with your mobile device.

9.2.10 Remote Display View

This procedure tells you how to view the machine display on a computer. The machine must be connected to a network with an Ethernet cable or with a wireless connection.

Refer to the Networking Connection section on page **463** for information on how to connect your machine to a network.

NOTE: *You must download the VNC Viewer to your computer. Go to www.realvnc.com to download the free VNC Viewer.*

1. Push the **[SETTING]** button.
2. Navigate to the Wired Connection or Wireless Connection tab in the Network tab.
3. Write down the IP Address for your machine.

4. Remote Display Tab

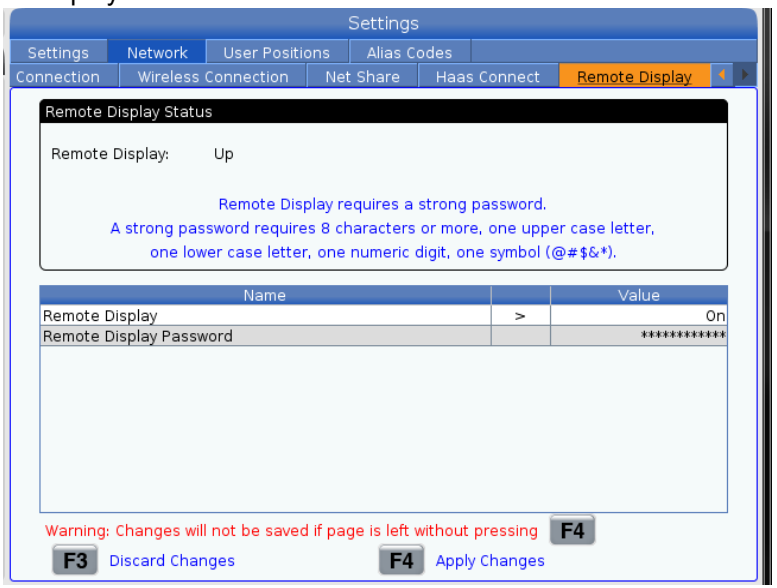

NOTE: *The Remote Display tab is available in software version 100.18.000.1020 or higher.*

5. Navigate to the Remote Display tab in the Network tab.
6. Turn ON the Remote Display.
7. Set the Remote Display Password.

NOTE: *The Remote Display feature requires a strong password, follow the guide lines on the screen.*

Press **[F4]** to apply settings.

8. Open the VNC Viewer application on your computer.

9. VNC Software Screen

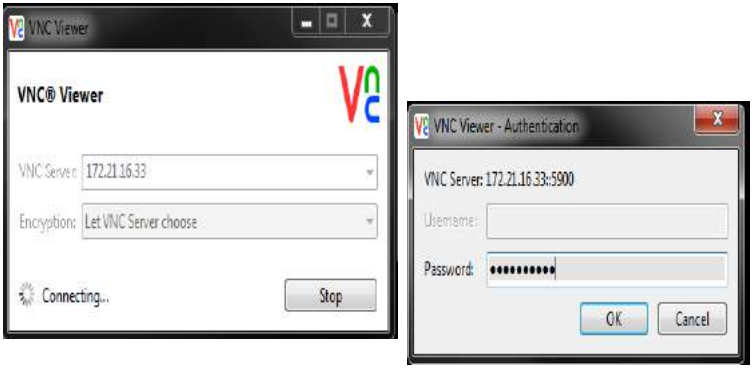

Enter your IP Address in VNC Server. Select **Connect**.

10. At the login box enter the password you entered at the Haas control.
11. Select **OK**.
12. The machine display shows on your computer screen

9.2.11 Machine Data Collection

Machine Data Collection (MDC) lets you use Q and E commands to extract data from the control through the Ethernet port or the Wireless Networking option. Setting 143 both enables the feature and specifies the data port that the control uses to communicate. MDC is a software-based feature that requires an additional computer to request, interpret, and store data from the control. The remote computer can also set certain Macro variables.

The Haas control uses a TCP server to communicate over networks. On the remote computer, you can use any terminal program that supports TCP; examples in this manual use PuTTY. Up to (2) simultaneous connections are allowed. Output requested by one connection is sent to all connections.

1. In the basic options section, type the machine's IP address and the port number in Setting 143. Setting 143 must have a nonzero value to use MDC.
2. Select the Raw or Telnet connection type.
3. Click "Open" to start the connection.

F9.20: PuTTY can save these options for subsequent connections. To keep the connection open, select "Enable TCP keepalives" in the "Connection" options.

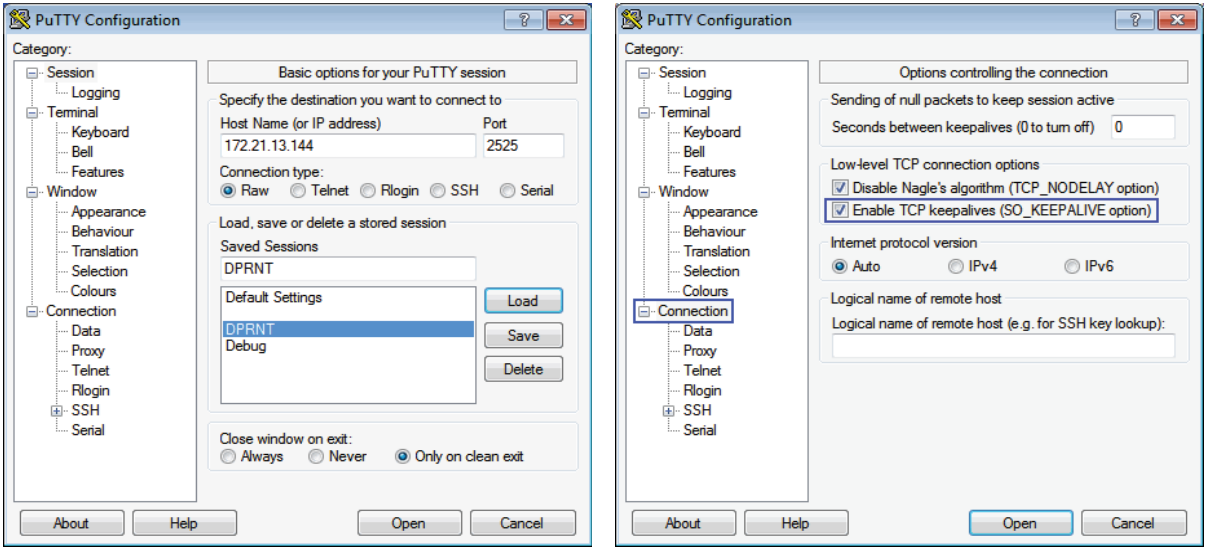

To check the connection, type `?Q100` in the PuTTY terminal window. If the connection is active, the machine control responds with *`SERIAL NUMBER, XXXXXX`*, where *`XXXXXX`* is the machine's actual serial number.

Data Collection Queries and Commands

The control responds to a Q command only when Setting 143 has a nonzero value.

MDC Queries

These commands are available:

T9.2: MDC Queries

Command	Definition	Example
Q100	Machine Serial Number	>Q100 SERIAL NUMBER, 3093228
Q101	Control Software Version	>Q101 SOFTWARE, VER 100.16.000.1041
Q102	Machine Model Number	>Q102 MODEL, VF2D
Q104	Mode (LIST PROG, MDI, etc.)	>Q104 MODE, (MEM)
Q200	Tool Changes (total)	>Q200 TOOL CHANGES, 23

Command	Definition	Example
Q201	Tool Number in use	>Q201 USING TOOL, 1
Q300	Power-on Time (total)	>Q300 P.O. TIME, 00027:50:59
Q301	Motion Time (total)	>Q301 C.S. TIME, 00003:02:57
Q303	Last Cycle Time	>Q303 LAST CYCLE, 000:00:00
Q304	Previous Cycle Time	>Q304 PREV CYCLE, 000:00:00
Q402	M30 Parts Counter #1 (resettable at control)	>Q402 M30 #1, 553
Q403	M30 Parts Counter #2 (resettable at control)	>Q403 M30 #2, 553 STATUS, BUSY (if in cycle)
Q500	Three-in-one (PROGRAM, Oxxxxx, STATUS, PARTS, xxxxx)	>PROGRAM, O00110, IDLE, PARTS, 4523
Q600	Macro or system variable	>Q600 801 MACRO, 801, 333.339996

You can request the contents of any macro or system variable with the **Q600** command; for example, **Q600 xxxx**. This shows the contents of macro variable **xxxx** on the remote computer.

Query Format

The correct query format is **?Q###**, where **###** is the query number, terminated with a new line.

Response Format

Responses from the control begin with > and end with /r/n. Successful queries return the name of the query, then the requested information, separated by commas. For example, a query of ?Q102 returns *MODEL, XXX*, where *XXX* is the machine model. The comma lets you treat the output as comma-separated variable (CSV) data.

An unrecognized command returns a question mark followed by the unrecognized command; for example, ?Q105 returns ?, ?Q105 .

E Commands (Write to Variable)

You can use an E command to write to macro variables **#1-33**, **100-199**, **500-699** (note that variables **#550-580** are unavailable if the mill has a probing system), **800-999** and **#2001** through **#2800** . For example, Exxxx yyyyyy.yyyyyy where xxxx is the macro variable and yyyyyy.yyyyyy is the new value.

NOTE: *When you write to a global variable, make sure that no other programs on the machine use that variable.*

9.3 User Positions

This tab collects settings that control user-defined positions such as second home, tool change mid-positions, spindle center line, tailstock and travel limits. Refer to the Settings section of this manual for more information about these position settings.

F9.21: User Positions Tab

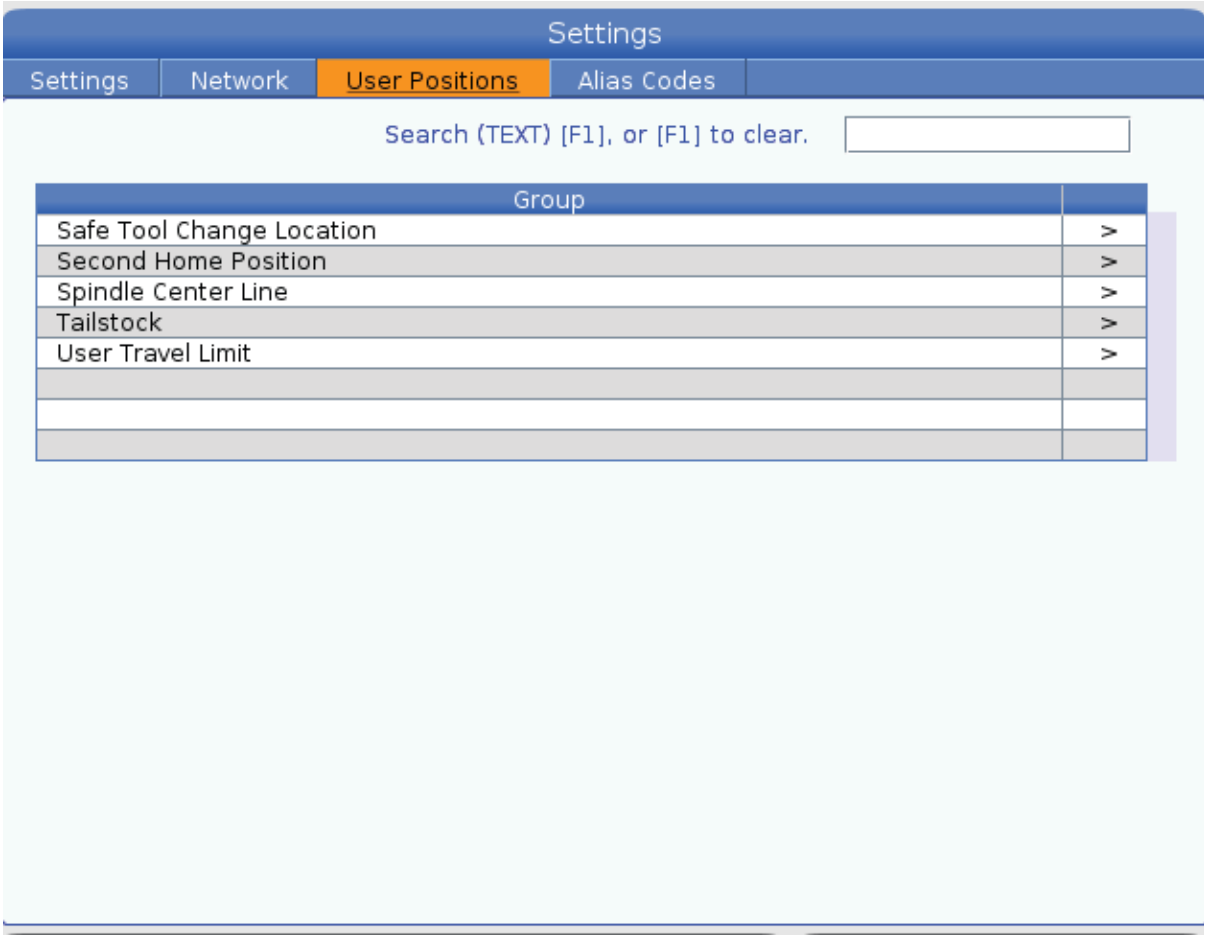

CAUTION: *Incorrectly set user positions can cause machine crashes. Set user positions with caution, especially after you have changed your application in some way (new program, different tools, etc.). Verify and change each axis position separately.*

To set a user position, jog the axis into the position you want to use, and then press F2 to set the position. If the axis position is valid, a crash warning appears (except for user travel limits). After you verify that you want to make the change to the position, the control sets the position and makes the setting active.

If the position is not valid, the message bar at the bottom of the screen gives a message to explain why the position is not valid.

To inactivate and reset user position settings, press ORIGIN while the user positions tab is active, then choose from the menu that appears.

F9.22: User Positions **[ORIGIN]** Menu

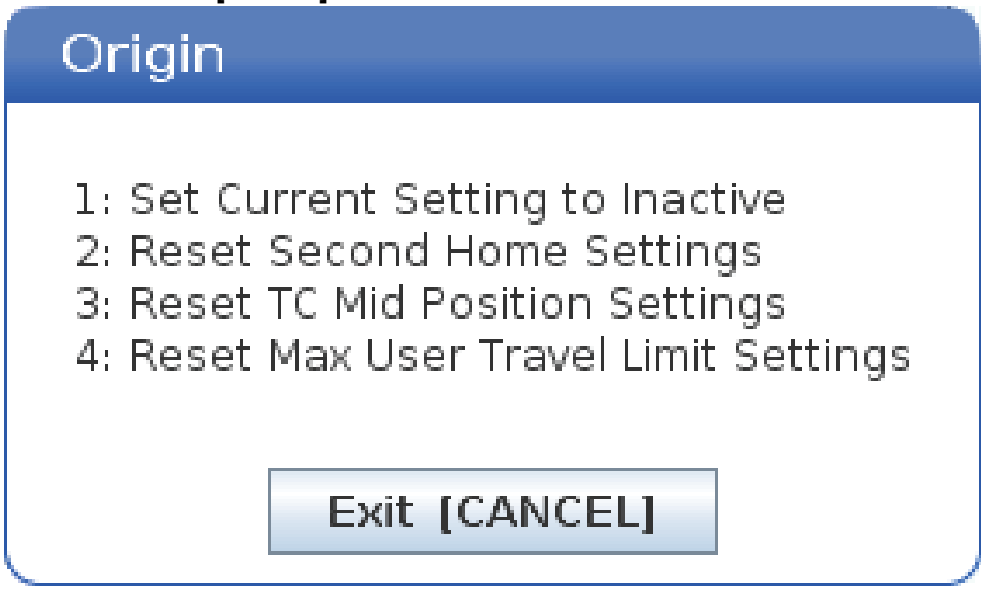

1. Press **[1]** to remove the value of the currently selected position setting and make it inactive.
2. Press **[2]** to remove the values of all second home position settings and make them inactive.
3. Press **[3]** to remove the values of all Tool Change Mid-Position settings and make them inactive.
4. Press **[4]** to remove the values of all Max User Travel Limit settings and make them inactive.
5. Press **[CANCEL]** to exit the menu without making changes.

9.4 More Information Online

For updated and supplemental information, including tips, tricks, maintenance procedures, and more, visit the Haas Service page at www.HaasCNC.com. You can also scan the code below with your mobile device to go directly to the Haas Service page:

Chapter 10: Other Equipment

10.1 Chucker Lathe

The Haas Chucker Lathe is ideal for dedicated small-part production, second-op parts, or short runs and prototyping. The 8-station tool turret provides fast tool changes for short cycle times.

10.2 Dual-Spindle Lathes

The DS-30Y Y-axis turning center combines dual-spindle turning with Y axis, C axis, and live tooling to create a powerful “done-in-one” machining solution for any shop. Off-center milling, drilling, and tapping operations are possible for increased machining capabilities. It comes standard with a 12-station BMT65 turret and synchronized C axis for versatile 4-axis capability. The opposed spindles support fully synchronized turning, and allow on-the-fly part pass-off to reduce cycle times. The DS-30Y has a medium footprint, yet provides a generous work envelope. This machine offers the best performance for the money – the best value – in it’s class.

10.3 Haas Bar feeder

The Haas Bar Feeder provides a simple and efficient way to automate part production on Haas lathes. It features a heavy-duty, compact design that boosts productivity and streamlines turning operations

10.4 Toolroom Lathe

The Toolroom Lathe includes features aimed at a machinist used to a manually positioned lathe. The lathe uses familiar manual handles, while giving full CNC capabilities.

10.5 More Information Online

For updated and supplemental information, including tips, tricks, maintenance procedures, and more, visit the Haas Service page at www.HaasCNC.com. You can also scan the code below with your mobile device to go directly to the Haas Service page:

Index

A

absolute positioning 171
Active Codes 61
active program 104
Advanced Tool Management (ATM) 136
    macros and 138
APL
    APL Enable 460
auto door (option)
    override 31
automatic tool offset setting 207
Automatic Tool Presetter 211
Automatic Tool Presetter Probe
    Alignment 211
    Calibration 219
    Test 214
axis motion
    circular 174
    linear 173
axis overload timer 150

B

barstock
    safety and 6
Basic Programming 167
basic programming
    absolute vs. incremental 171
beacon light
    status 31
Block Delete 37
block selection 157

C

Calculators
    Arc 56
    Milling / Turning 55
    Standard 53
    Tapping 55
C-Axis 223
    cartesian coordinate commands 225
    cartesian to polar 223
check box selection 104
chuck
    installation of 130
    removal of 131
    safety and 6
chuck foot pedal 134
circular interpolation 174
Collet installation 133
control display
    active codes 52
    basic layout 44
    offsets 46
control pendant 29, 31
    detail 25
    USB port 31
coolant
    operator override 43
    setting 32 and 427
coolant gauge 62
coolant tank assembly
    detail 27

coordinate system
automatic tool offset setting 207
effective 206
FANUC 206
FANUC child coordinate 206
FANUC common coordinate 206
FANUC work coordinate 206
global 207
coordinate systems 206
counters
reset 51
create a container
unzip files 103
zip files 103
Current commands 46

D

Departure move 179
device manager
create new program 102
edit 105
file display 101
operation 100
device manager (List Program) 99
directory
create new 106
display
axis positions 64
distance to go position 64
Drawtube
clamping force adjustment 135
cover plate 136
warnings 132
Dual Action Parts Catcher
Setup 147
Dual spindle 227
finding R value 230
R phase offset 229
secondary spindle 227
synchronization control display 228
synchronized spindle control 228

E

edit keys 156
editing
highlight code 156
editor 159
Edit menu 160
File menu 160
Modify menu 162
pull-down menu 159
Search menu 161
Error Report Shift F3 ..... 70, 107

F

Feature List 231
200-hour tryout 232
Enable/Disable 232
Features
axis overload timer 148
background edit 148
Graphics 148
feed hold
as override 43
file
deletion 106
file display columns 101
file selection
multiple 104
foot pedals
chuck 134
steady rest 135
tailstock 145

G

G-codes 297
cutting 173
graphics mode 149

H

Haas Connect 474
Haas Robot
FANUC DCS 13
installation 13, 152
introduction 151
Quick Start Guide 152
HaasDrop 473
help function 79

High-Pressure Coolant
HPC 27

I

incremental positioning 171
input
special symbols..... 107
input bar 66
interpolation motion
circular 174
linear 173

J

Jog mode 122
entry 122

K

keyboard
alpha keys 40
cursor keys 34
display keys 35
jog keys..... 41
key groups 32
mode keys 35
numeric keys 39
override keys..... 42

L

LCD Touchscreen - maintenance 79
LCD Touchscreen - navigation..... 73
LCD Touchscreen - overview 71
LCD Touchscreen - program editing 78
LCD Touchscreen - selectable boxes 75
LCD Touchscreen - Virtual Keyboard 77
line numbers
remove all..... 162
linear interpolation..... 173
LIST PROGRAM display 100
Live tooling..... 233
cartesian interpolation example..... 225
cartesian programming example 224
cartesian settings 225
cartesian to polar programming..... 223
c-axis 233
m133/m134/m135 fwd/rev/stop 236
m19 orient spindle..... 236, 412
mounting and alignment 234
programming notes 233
locate the last program error 113

M

M30 counters..... 63
machine components 23
machine data
back up and recover 108
Machine Data Collection 476
machine position 64
machine power-up 97
machine restore
full data..... 112
macro variables
#5021-#5026 current machine coordinate position..... 258
#5041-#5046 current work coordinate position..... 258
axis position..... 258
tool offsets..... 254

Macros
#3000 programmable alarm 255
#3001-#3002 timers 255
#3006 programmable stop 257
#3030 single block 257
1-bit discrete outputs 253
aliasing 281
arguments 240
block look ahead and block delete 238
DPRNT 277
DPRNT editing 279
DPRNT execution 279
DPRNT formatted output 278
DPRNT settings 279
G65 macro subprogram call 280
global variables 244
introduction 236
local variables 243
look ahead 237
macro variable display 239
macro variable table 244
round off 237
setting aliasing 282
system variables 244
system variables in-depth 252
timers and counters window 240
useful g- and m-codes 236
variable usage 265
macros
M30 counters and 63
variables 243
main spindle display 68
manual data input (MDI) 158
save as numbered program 158
material
fire risk 9
M-codes 391
coolant commands 173
program stop 173
spindle commands 172
media display 56
memory lock 31
mode display 45

N

Network Connection 463
Icons 465
Net Share Setting 471
Wired Connection 467
Wired Network Settings 468
Wireless Connection Setup 468
new program 102

O

offsets
display 46
operating modes 45
operation
unattended 9
operator position 65
optional stop 394
overrides 43
disabling 43

P

part setup 121
set tool offset 128
set work offset 130
tool offsets 123
work offsets 129
position display 64
positions
distance to go 64
machine 64
operator 65
work (G54) 64
power up zero return 97
program
active 104
duplication 106
rename 106
programming
subprograms 207
programs
running 113

R

Rapid Mode 455

remote jog handle (RJH-Touch)
manual jogging 119
mode menu 118
overview 116
tool offsets 119
work offsets 120
running programs 113
run-stop-jog-continue 150

S

safe mode 114
safety
decals 16
door interlock 6
during operation 5
electrical 4
glass window 7
inspection 6
introduction 1
part loading/unloading 6
robot cells 12
tool loading/unloading 6
safety decals
standard layout 16
symbol reference 17
safety information 21
search
find / replace 161
second home 31
Secondary spindle
clamping 231
m-codes 230
spindle swap 231, 375, 408
secondary spindle programming 230
selection
multiple blocks 157
Servo tailstock
power failure 143
start up 143
setup mode 9
keyswitch 31
Shape Creator 283
special symbols 107
spindle load meter 68
spindle safety limit 14
spindle warm-up 99
ST-20 minimal lube panel
detail 26
steady rest foot pedal 135
subprograms 207
Synchronized Spindle Control (SSC) 231

T

tabbed menus
basic navigation 71
tailstock
cancel restricted zone 146
foot pedal 145
hold force 143
jogging 146
motion 144
programming 142, 207
restricted zone 145
resume operation 143
Setting 94 and 146
settings 144
ST-40 servo brake engage 143
ST-40 servo operation 143
X-axis clearance plane 145
text
find / replace 161
selection 157
timer and counters display
reset 51
timers and counters display 63
tips and tricks
calculator 167
operation 166
programming 163
settings and parameters 165

TNC
approach and departure 179
approach move 179
canned cycles 182
concept 177
Ex1-standard interpolation 183
Ex3-G72 roughing canned cycle 187
Ex4-G73 roughing canned cycle 188
Ex5-G90 modal rough turning cycle 189
Ex6-G94 modal rough turning cycle 190
G71 roughing 185
general 175
geometry 193
Imaginary Tool Tip 191
manually calculating 193
programming 176
radius wear offset 180
tool length 182
using 178
without 192
tool functions 171
FANUC coordinate system 171
load or change tools 172
tool management tables
save and restore 139
Tool Nose Compensation 179
tool nose compensation TNC 175
tool turret
air pressure 140
eccentric locating cam buttons 140
load or change tools 141
operations 139
protective caps 140

U

unattended operation 9
user positions 479

W

work (G54) position 64
work offset
macros and 259
workholding 121
safety and 5
workpiece
safety 6

X

x offset to centerline
Hybrid BOT and VDI 141
setting 141

Y

y axis 290
travel envelope 291
vdi turret and 291
Y-Axis
operation and programming 291